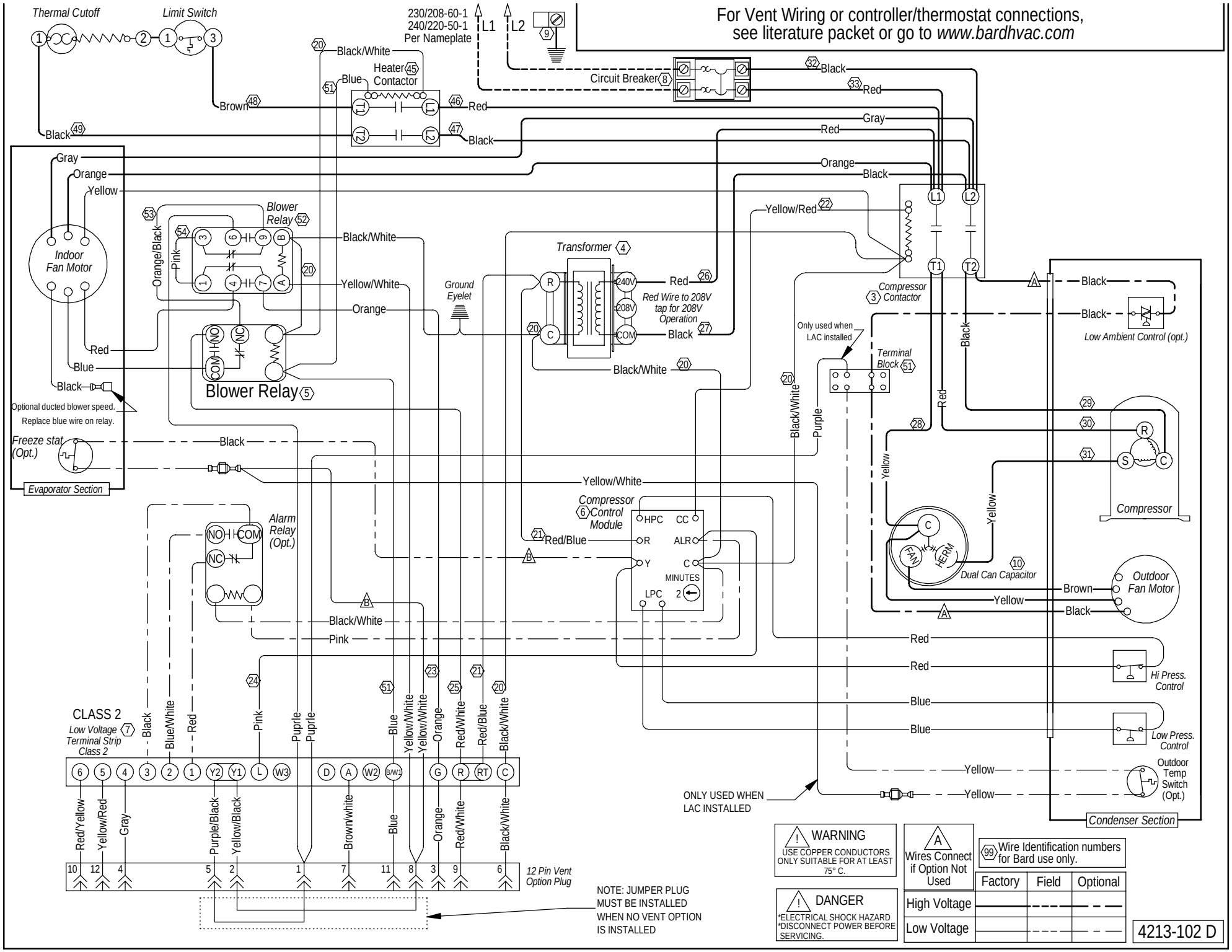
For Vent Wiring or controller/thermostat connections, see literature packet or go to www.bardhvac.com
Thermal Cutoff
Limit Switch
230/208-60-1
240/220-50-1
Per Nameplate
L1
L2
Circuit Breaker
Heater Contactor
Indoor Fan Motor
Blower Relay
Blower Relay
Transformer
Ground Eyelet
Red Wire to 208V tap for 208V Operation
Optional ducted blower speed. Replace blue wire on relay.
Freeze stat (Opt.)
Evaporator Section
Alarm Relay (Opt.)
Compressor Control Module
HPC
CC
R
ALR
Y
C
MINUTES
LPC
Compressor Contactor
Only used when LAC installed
Terminal Block
Low Ambient Control (opt.)
Compressor
Dual Can Capacitor
Outdoor Fan Motor
Hi Press. Control
Low Press. Control
Outdoor Temp Switch (Opt.)
Condenser Section
CLASS 2
Low Voltage Terminal Strip Class 2
12 Pin Vent Option Plug
ONLY USED WHEN LAC INSTALLED
NOTE: JUMPER PLUG MUST BE INSTALLED WHEN NO VENT OPTION IS INSTALLED
WARNING
USE COPPER CONDUCTORS ONLY SUITABLE FOR AT LEAST 75° C.
DANGER
*ELECTRICAL SHOCK HAZARD
*DISCONNECT POWER BEFORE SERVICING.
Wires Connect if Option Not Used
Wire Identification numbers for Bard use only.
Factory
Field
Optional
High Voltage
Low Voltage
4213-102 D