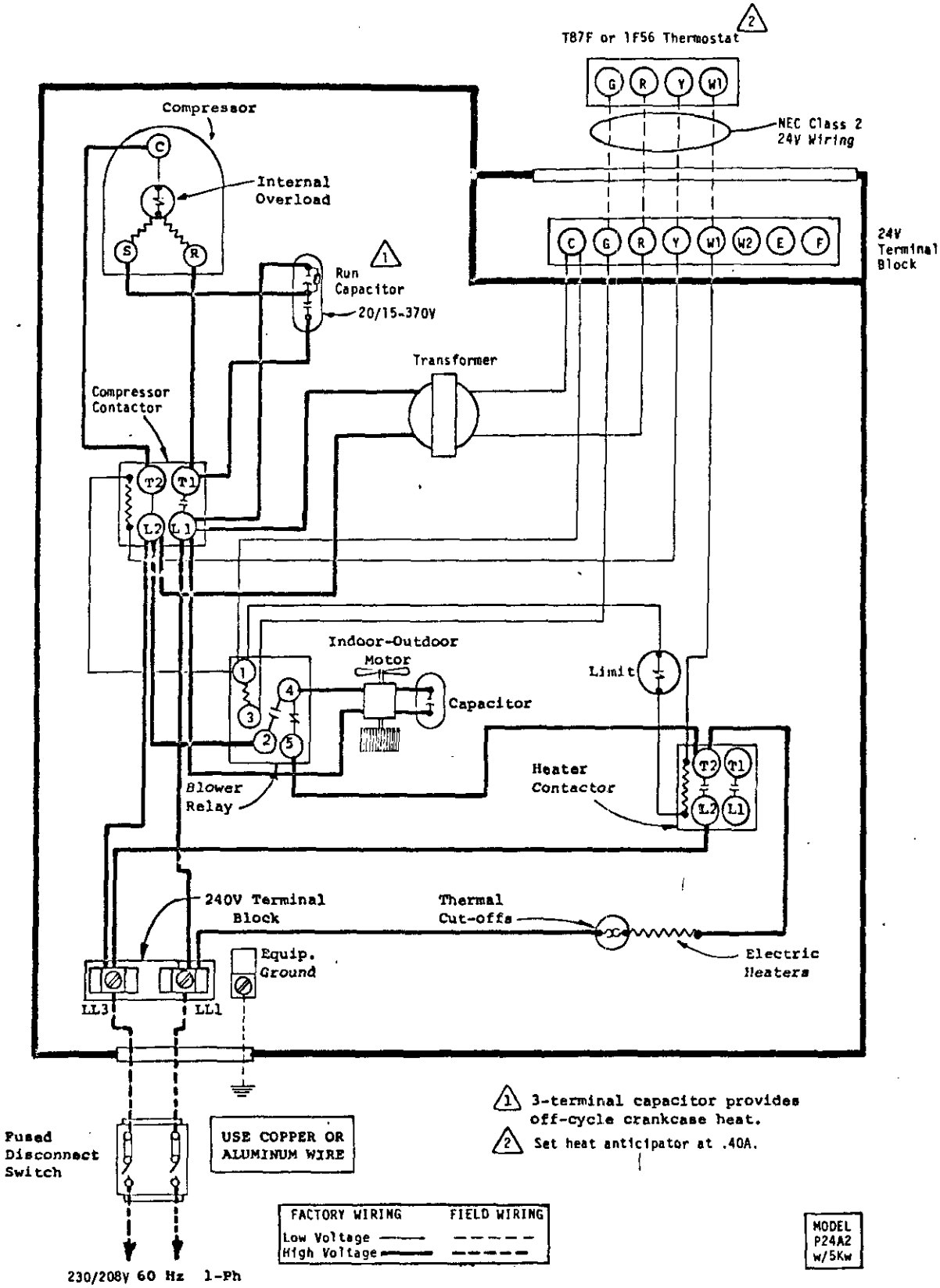

1 3-terminal capacitor provides off-cycle crankcase heat.

2 Set heat anticipator at .40A.

4000-120A