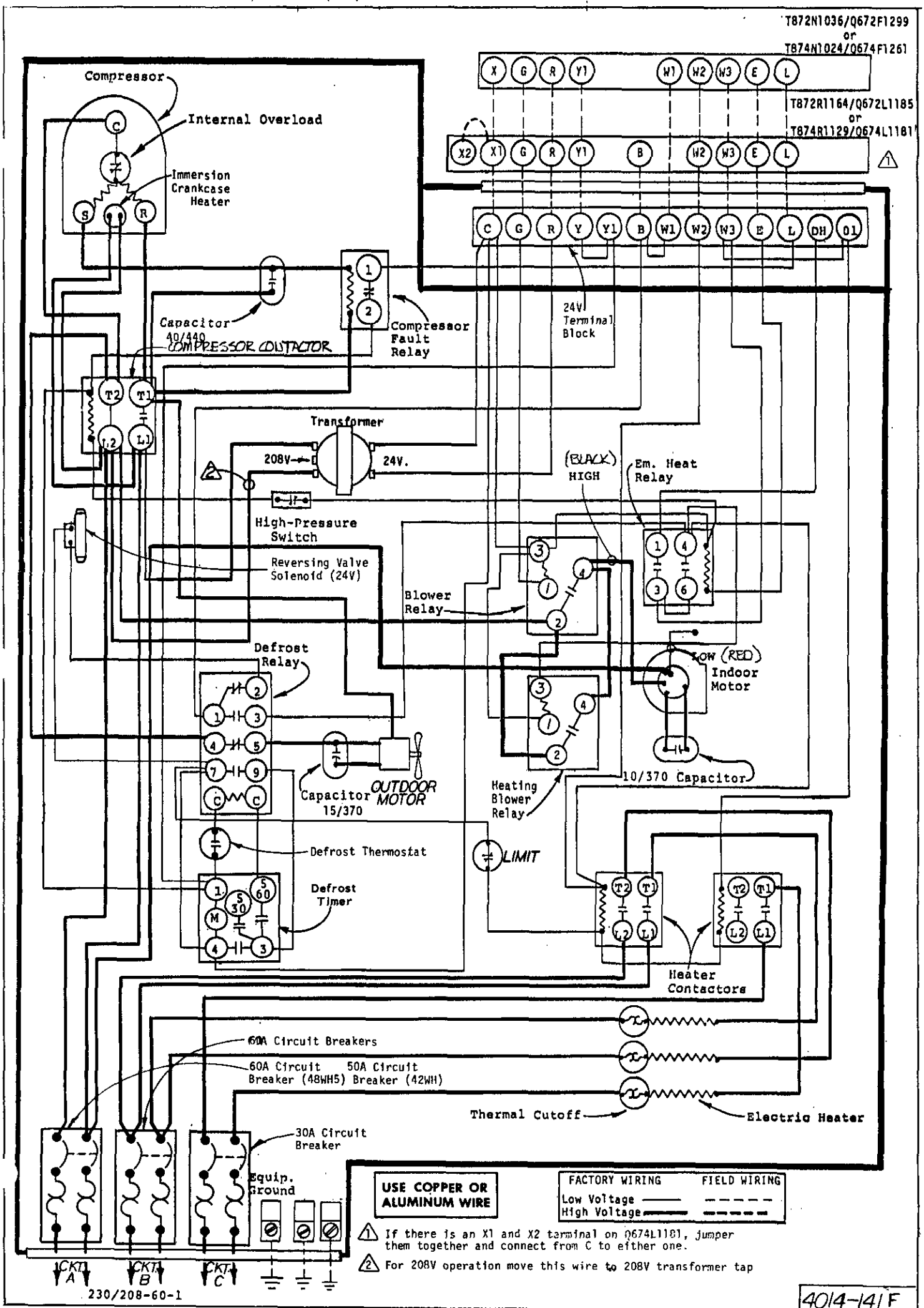
T872N1036/Q672F1299
or
T874N1024/Q674F1261
T872R1164/Q672L1185
or
T874R1129/Q674L1181
Compressor
Internal Overload
Immersion Crankcase Heater
Capacitor 40/440
COMPRESSOR CONTACTOR
Compressor Fault Relay
24V Terminal Block
Transformer
208V
24V.
High-Pressure Switch
Reversing Valve Solenoid (24V)
(BLACK) HIGH
Em. Heat Relay
Blower Relay
Defrost Relay
LOW (RED)
Indoor Motor
Capacitor 15/370
OUTDOOR MOTOR
Heating Blower Relay
10/370 Capacitor
Defrost Thermostat
LIMIT
Defrost Timer
Heater Contactors
60A Circuit Breakers
60A Circuit Breaker (48WH5)
50A Circuit Breaker (42WH)
Thermal Cutoff
Electric Heater
30A Circuit Breaker
Equip. Ground
CKT. A
CKT. B
CKT. C
230/208-60-1
USE COPPER OR ALUMINUM WIRE
FACTORY WIRING
FIELD WIRING
Low Voltage
High Voltage
1 If there is an X1 and X2 terminal on Q674L1181, jumper them together and connect from C to either one.
2 For 208V operation move this wire to 208V transformer tap
4014-141F