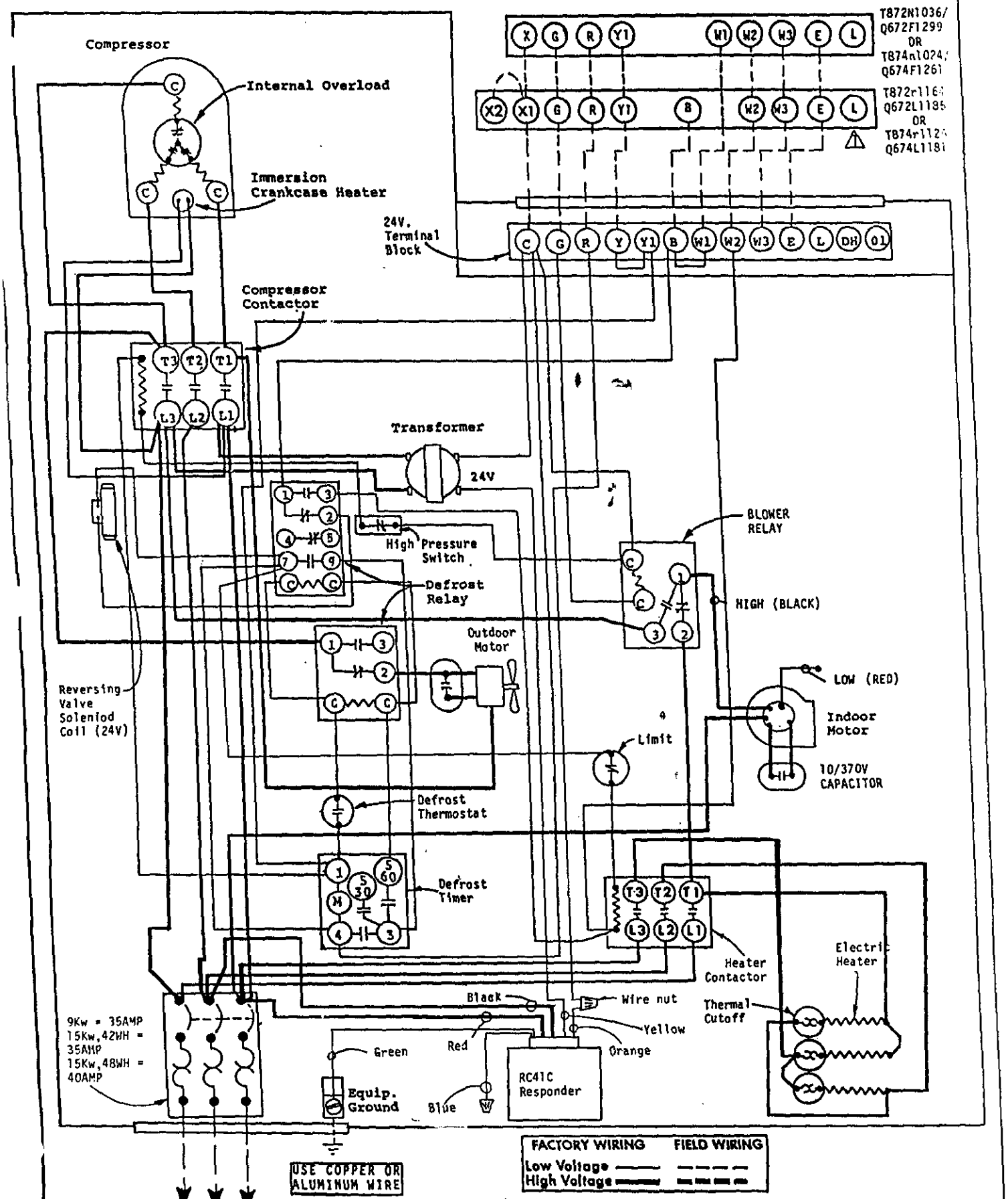
Compressor
Internal Overload
Immersion Crankcase Heater
24V. Terminal Block
Compressor Contactor
Transformer
24V
High Pressure Switch
Defrost Relay
Outdoor Motor
Reversing Valve Solenoid Coil (24V)
BLOWER RELAY
HIGH (BLACK)
LOW (RED)
Indoor Motor
10/370V CAPACITOR
Limit
Defrost Thermostat
Defrost Timer
Heater Contactor
Electric Heater
Thermal Cutoff
Black
Wire nut
Yellow
Orange
Red
Green
Blue
RC41C Responder
Equip. Ground
9Kw = 35AMP
15Kw,42WH = 35AMP
15Kw,48WH = 40AMP
USE COPPER OR ALUMINUM WIRE
FACTORY WIRING
FIELD WIRING
Low Voltage
High Voltage
If there is an X1 and X2 terminal on Q674L1181, jumper them together and connect from C to either one.
T872N1036/ Q672F1299 OR T874n1024/ Q674F1261
T872r1163 Q672L1185 OR T874r1125 Q674L1181

460-60-3