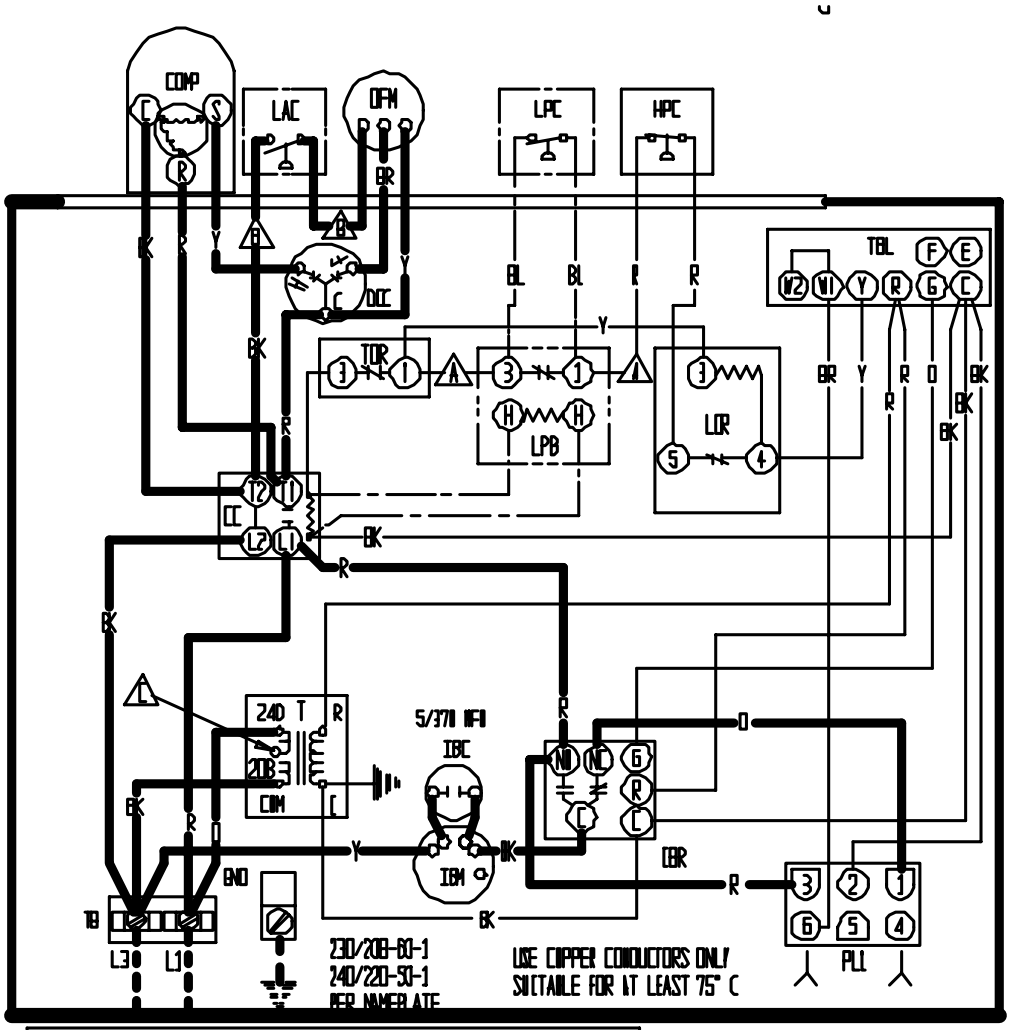

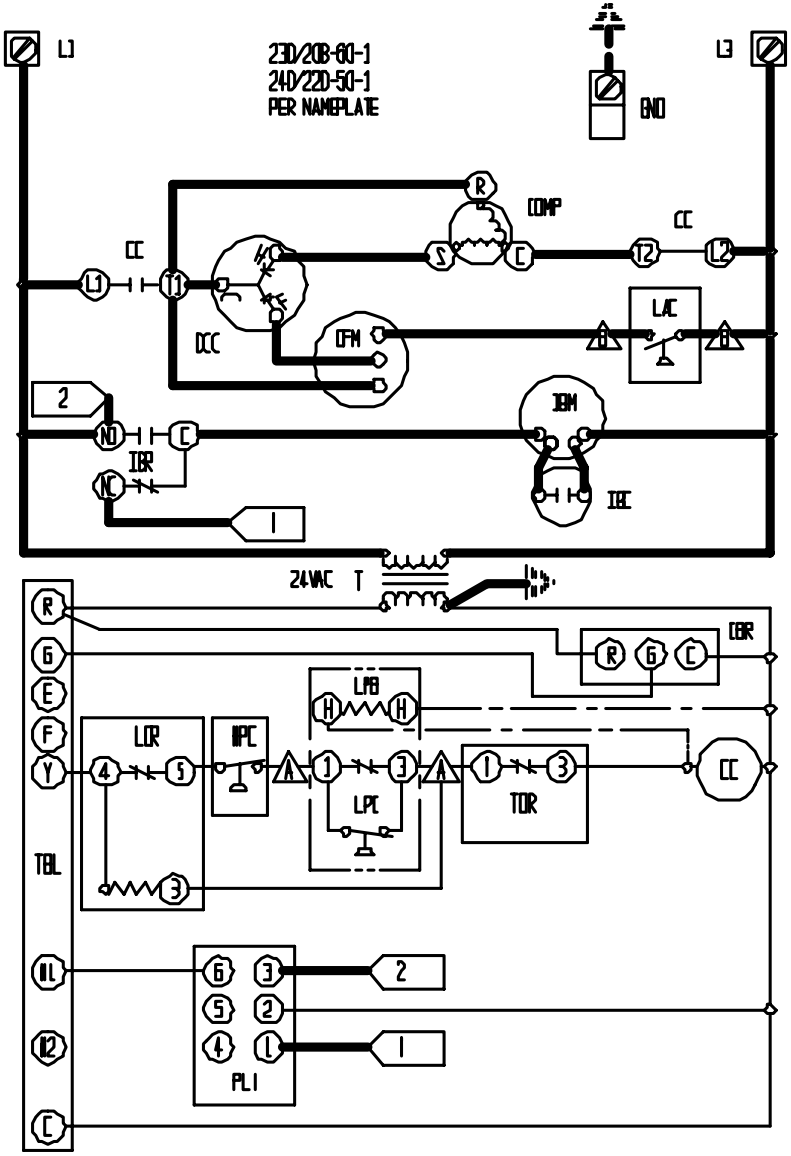

COMPONENT CODE			
CC	COMPRESSOR CONTACTOR	LPC	LOW PRESSURE CONTROL
COMP	COMPRESSOR	OFM	OUTDOOR FAN MOTOR
DDC	DUAL CAN CAPACITOR	PL1	PLUG 11
GND	EQUIPMENT GROUND	T	TRANSFORMER
HPC	HIGH PRESSURE CONTROL	TB	TERMINAL BLOCK
IBC	INDOOR BLOWER CAPACITOR	TBL	LOW VOLTAGE TERMINAL BLOCK
IBM	INDOOR BLOWER MOTOR	TDR	TIME DELAY RELAY
IBR	INDOOR BLOWER RELAY		
LAC	LOW AMBIENT CONTROL		
LOR	LOCK OUT RELAY		
LPB	LOW PRESSURE BYPASS		

CAPACITOR	PART NO.	MODEL
40/5-370	8552-150	P11244A2

A, B LABELED WIRES CONNECT IF NO OPTIONS USED. C MOVE ORANGE WIRE TO 208V TAP FOR 208V OPERATION

	FACTORY STD.	FIELD	OPTIONAL
HIGH VOLTAGE	———	— — —	———
LOW VOLTAGE	———	— — —	———
ACCESSORY			—·—·—

COLOR CODE							
BK	BLACK	Y	YELLOW	V	VIOLET	T	TAN
BR	BROWN	G	GREEN	(PR)	PURPLE	PK	PINK
R	RED	BL	BLUE	GY	GRAY	L	LAVENDER
O	ORANGE	W	WHITE	(S)	SLATE		

HARD MFG. CO.

4063-129 A