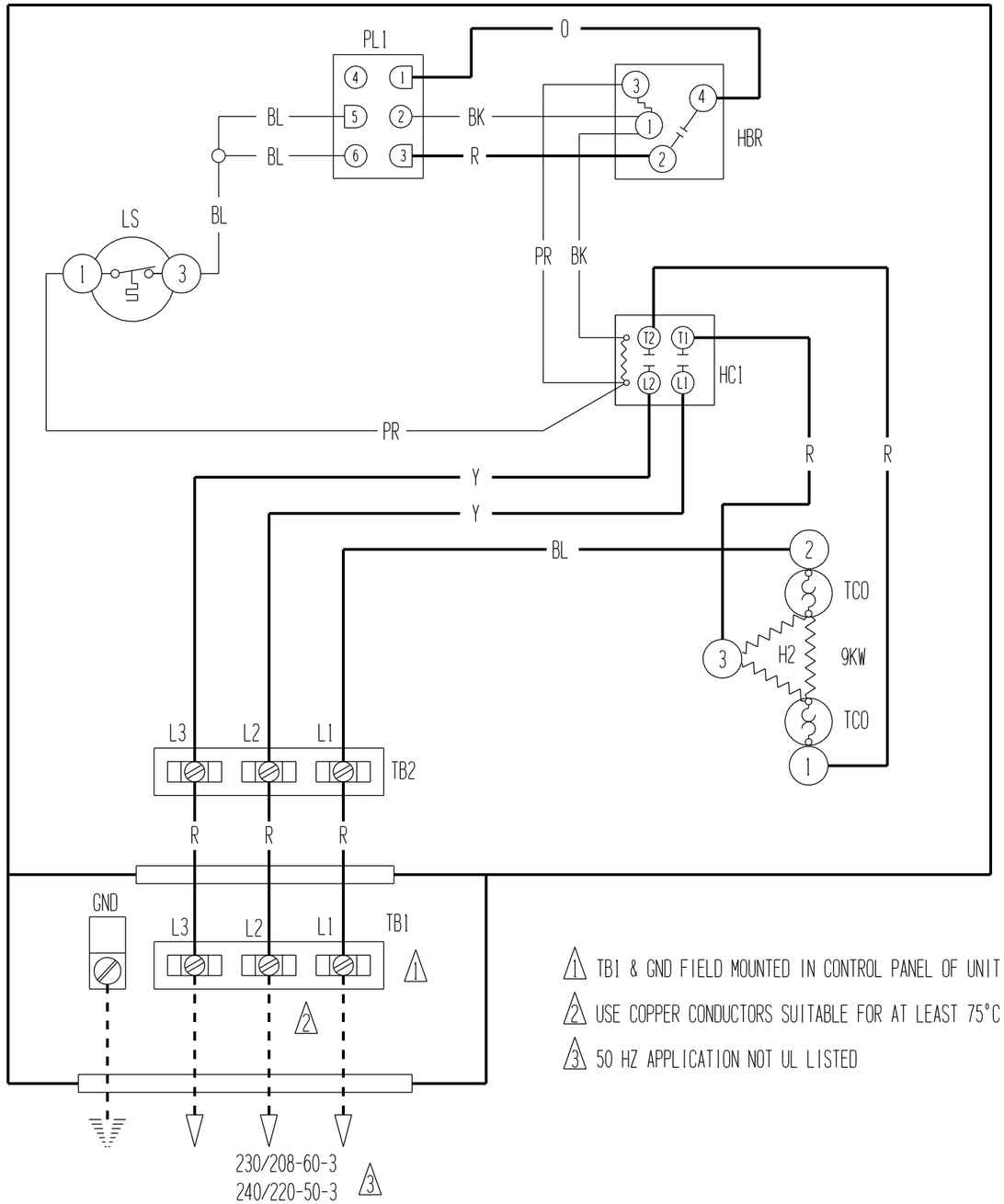

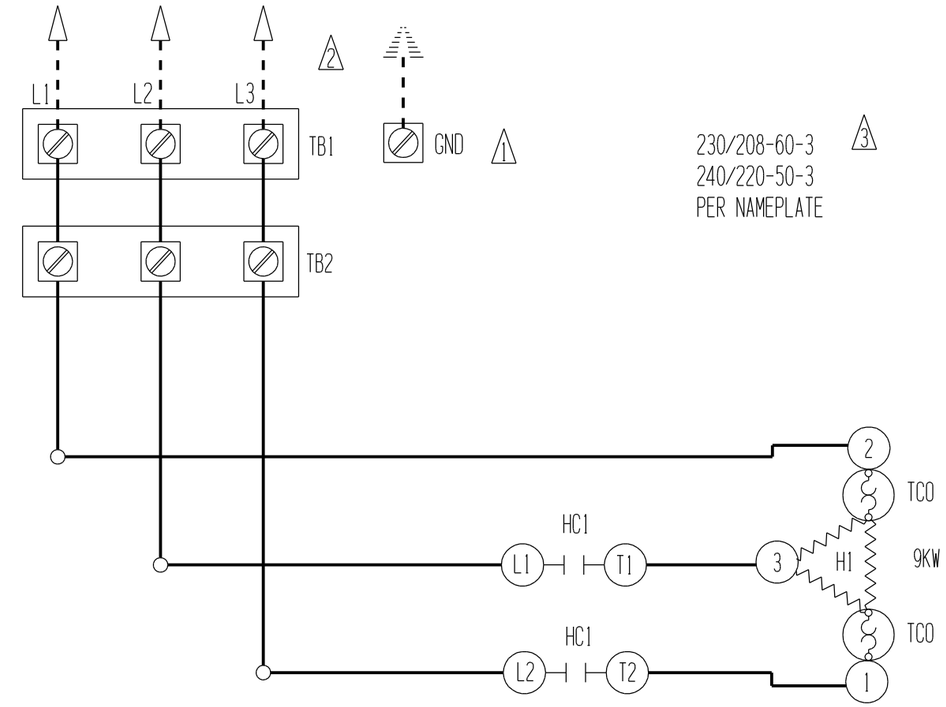

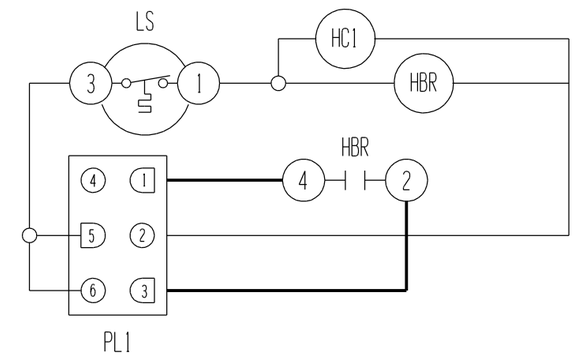

1. TB1 & GND FIELD MOUNTED IN CONTROL PANEL OF UNIT
2. USE COPPER CONDUCTORS SUITABLE FOR AT LEAST 75°C
3. 50 HZ APPLICATION NOT UL LISTED

COMPONENT CODE			
GND	EQUIPMENT GROUND	HBR	HEATING BLOWER RELAY
H1	HEAT STRIP #1	LS	LIMIT SWITCH
H2	HEAT STRIP #2	PL1	PLUG #1
HC1	HEATER CONTACTOR #1	TB1	TERMINAL BLOCK 1
HC2	HEATER CONTACTOR #2	TB2	TERMINAL BLOCK 2
		TCO	THERMAL CUTOFF

	FACTORY STD.	FIELD	OPTIONAL
HIGH VOLTAGE	———	- - - - -	—·—
LOW VOLTAGE	———	- - - - -	—-—
ACCESSORY			—··—

COLOR CODE							
BK	BLACK	Y	YELLOW	V	VIOLET	T	TAN
BR	BROWN	G	GREEN	(PR)	PURPLE	PK	PINK
R	RED	BL	BLUE	GY	GRAY	L	LAVENDER
O	ORANGE	W	WHITE	(S)	SLATE		

BARD MFG. CO.

DWG.	4067-211 A
DRN.	DUCHENE
CHK./APPR.	