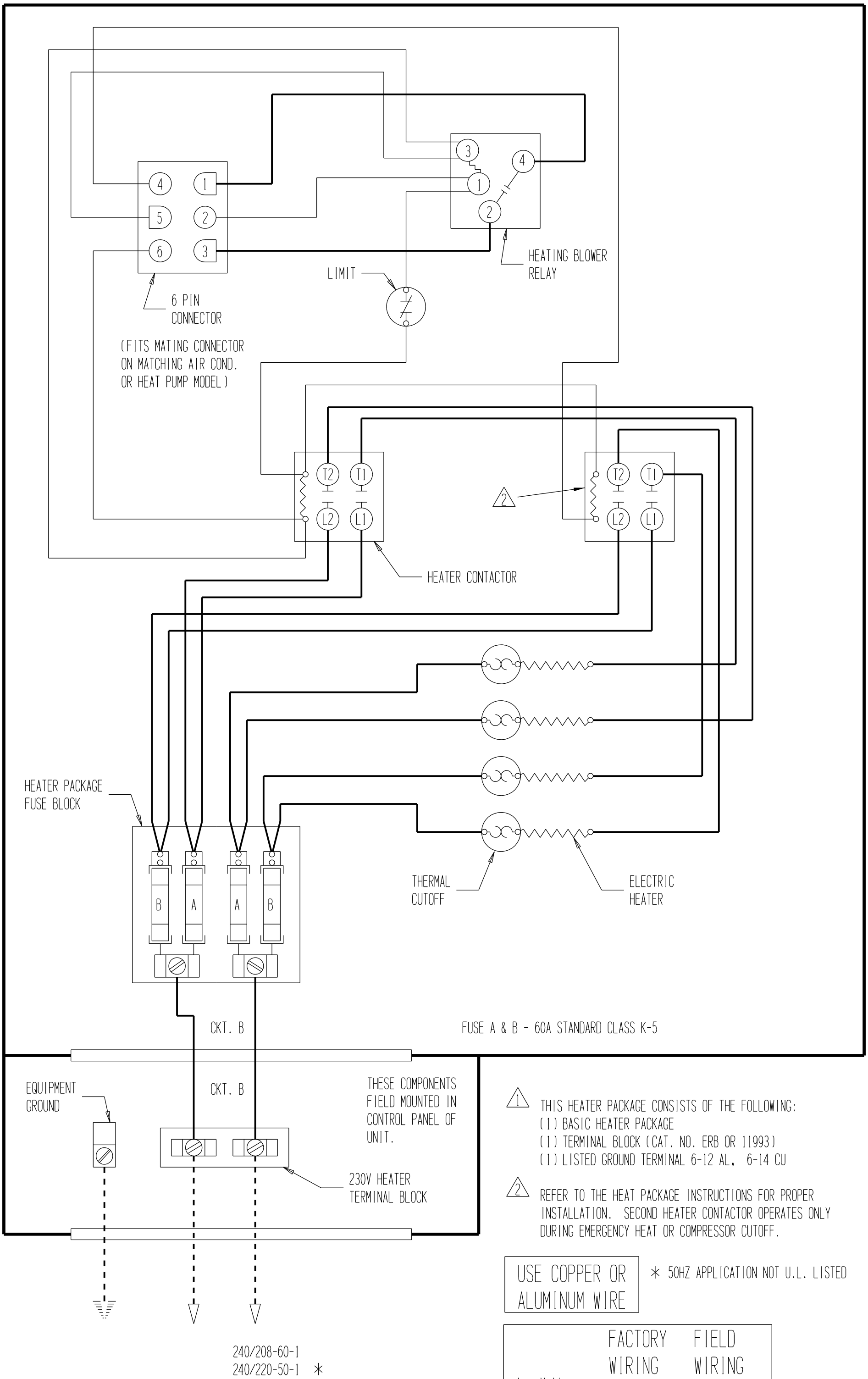

1 THIS HEATER PACKAGE CONSISTS OF THE FOLLOWING:
(1) BASIC HEATER PACKAGE
(1) TERMINAL BLOCK (CAT. NO. ERB OR 11993)
(1) LISTED GROUND TERMINAL 6-12 AL, 6-14 CU

2 REFER TO THE HEAT PACKAGE INSTRUCTIONS FOR PROPER INSTALLATION. SECOND HEATER CONTACTOR OPERATES ONLY DURING EMERGENCY HEAT OR COMPRESSOR CUTOFF.

USE COPPER OR ALUMINUM WIRE

* 50HZ APPLICATION NOT U.L. LISTED

	FACTORY WIRING	FIELD WIRING
Low Voltage	———	- - - - - -
High Voltage	———	- - - - - -

4068-140 F