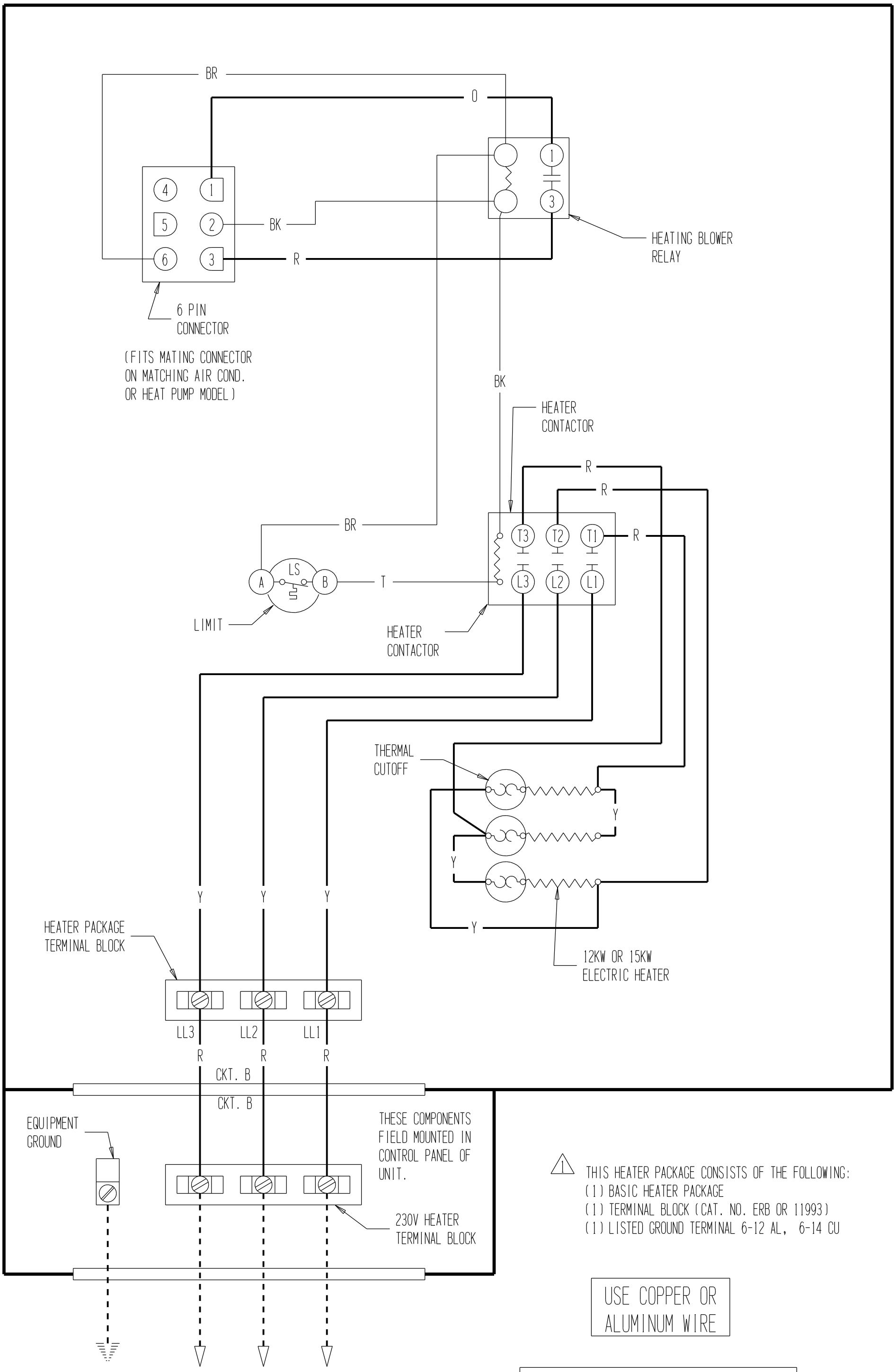

⚠1 THIS HEATER PACKAGE CONSISTS OF THE FOLLOWING:
(1) BASIC HEATER PACKAGE
(1) TERMINAL BLOCK (CAT. NO. ERB OR 11993)
(1) LISTED GROUND TERMINAL 6-12 AL, 6-14 CU

USE COPPER OR ALUMINUM WIRE

	FACTORY WIRING	FIELD WIRING
Low Voltage	———	- - - - - -
High Voltage	▬▬▬	▬ ▬ ▬ ▬

4068-321