MC92AE LADDER DIAGRAM

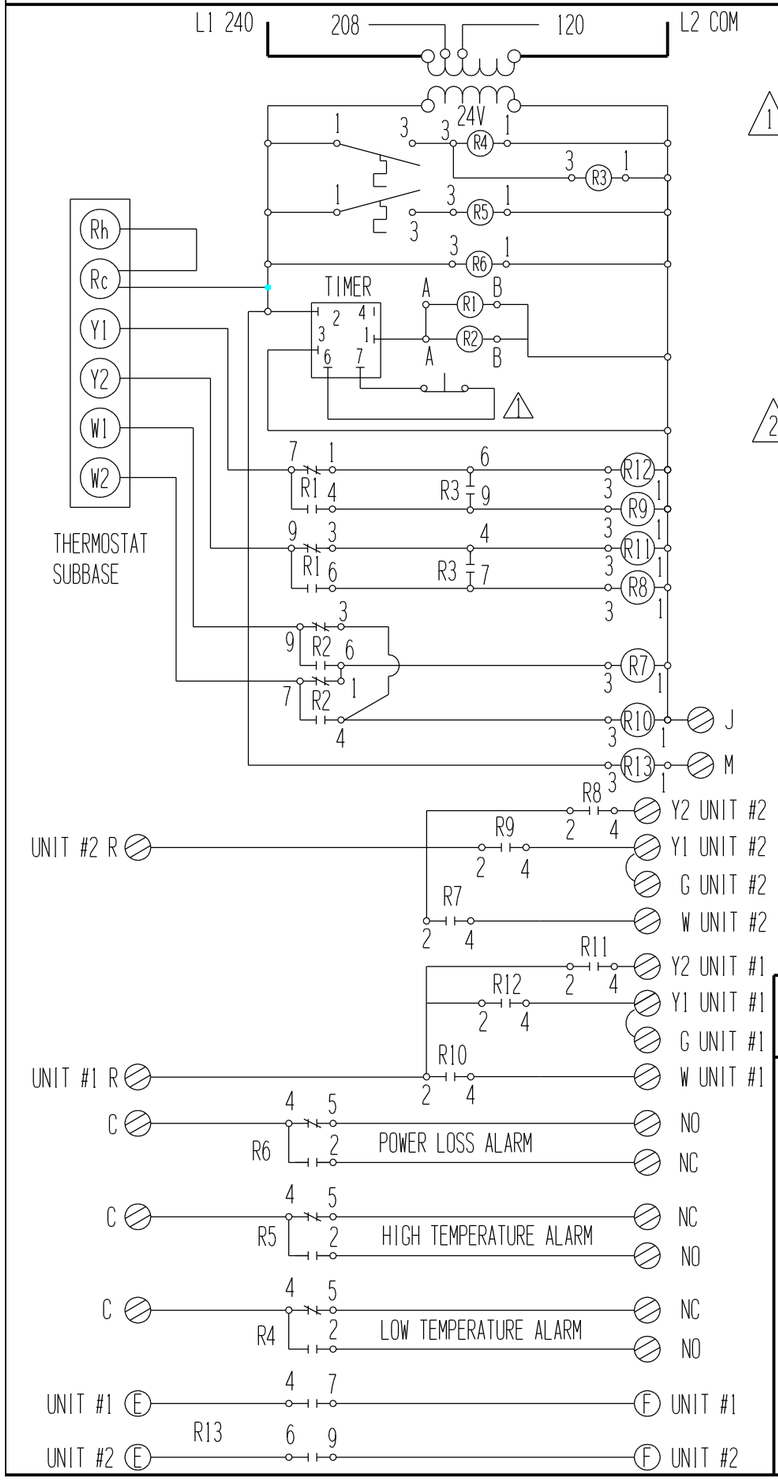

1. PUSH AND HOLD SWITCH FOR 10 SECONDS FOR TIMER SPEED UP. CONNECT SWITCH FROM 6 TO 7 FOR 24 HR. CONNECT SWITCH FROM 6 TO 4 FOR 7 DAY TIMING.

2. DISCONNECT ORANGE WIRE AND REPLACE WITH RED WIRE FOR 208 VOLT, WHITE WIRE FOR 120 VOLT OPERATION.

WIRE COLOR	COLOR CODE ABBREVIATION
BLACK	BK
BROWN	BR
RED	R
ORANGE	O
YELLOW	Y
GREEN	G
BLUE	BL
VIOLET(PURPLE)	V(PR)
GRAY(SLATE)	GY(S)
WHITE	W
TAN	T
PINK	PK
LAVENDER	L
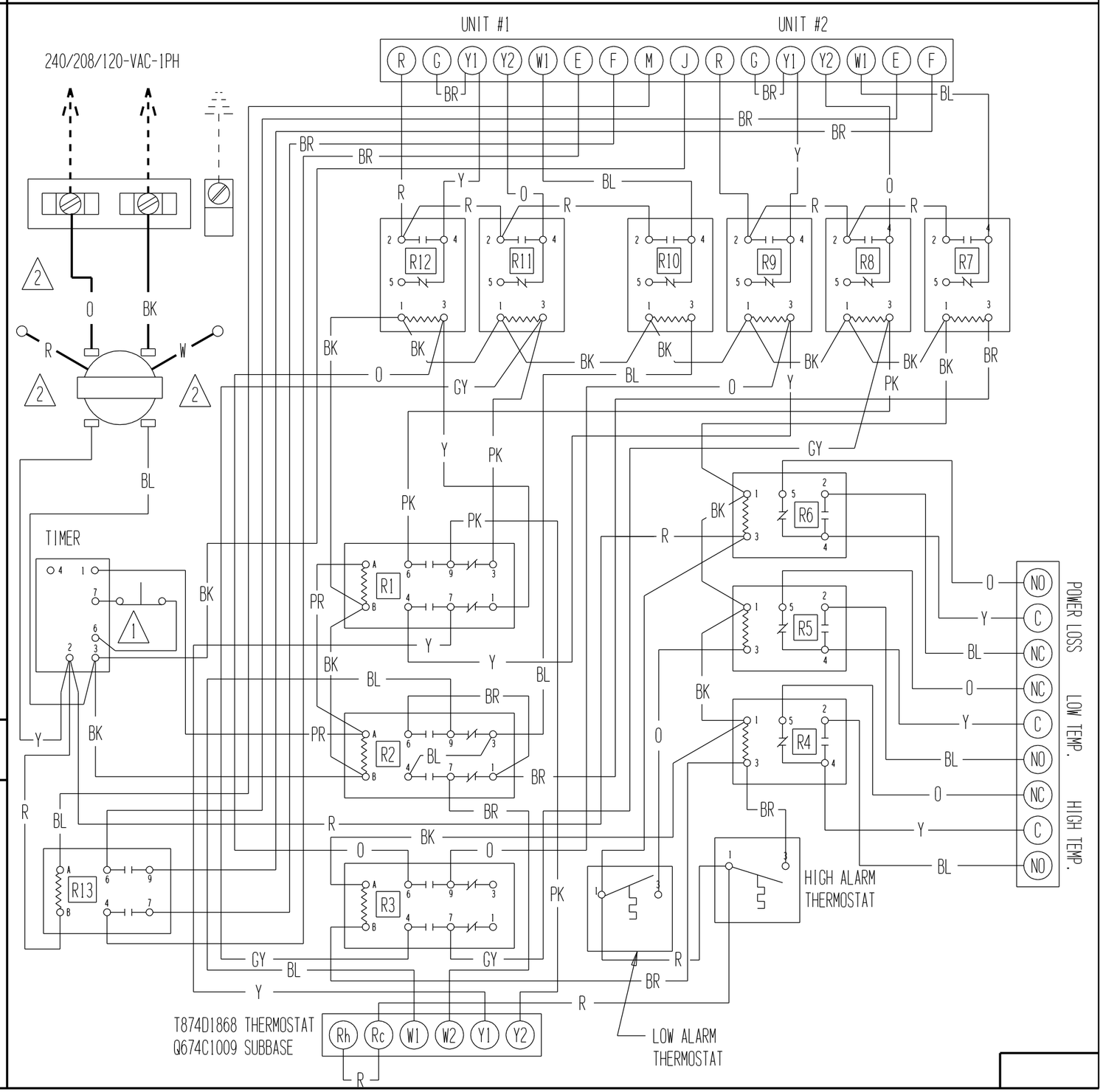
MC92AE WIRING DIAGRAM