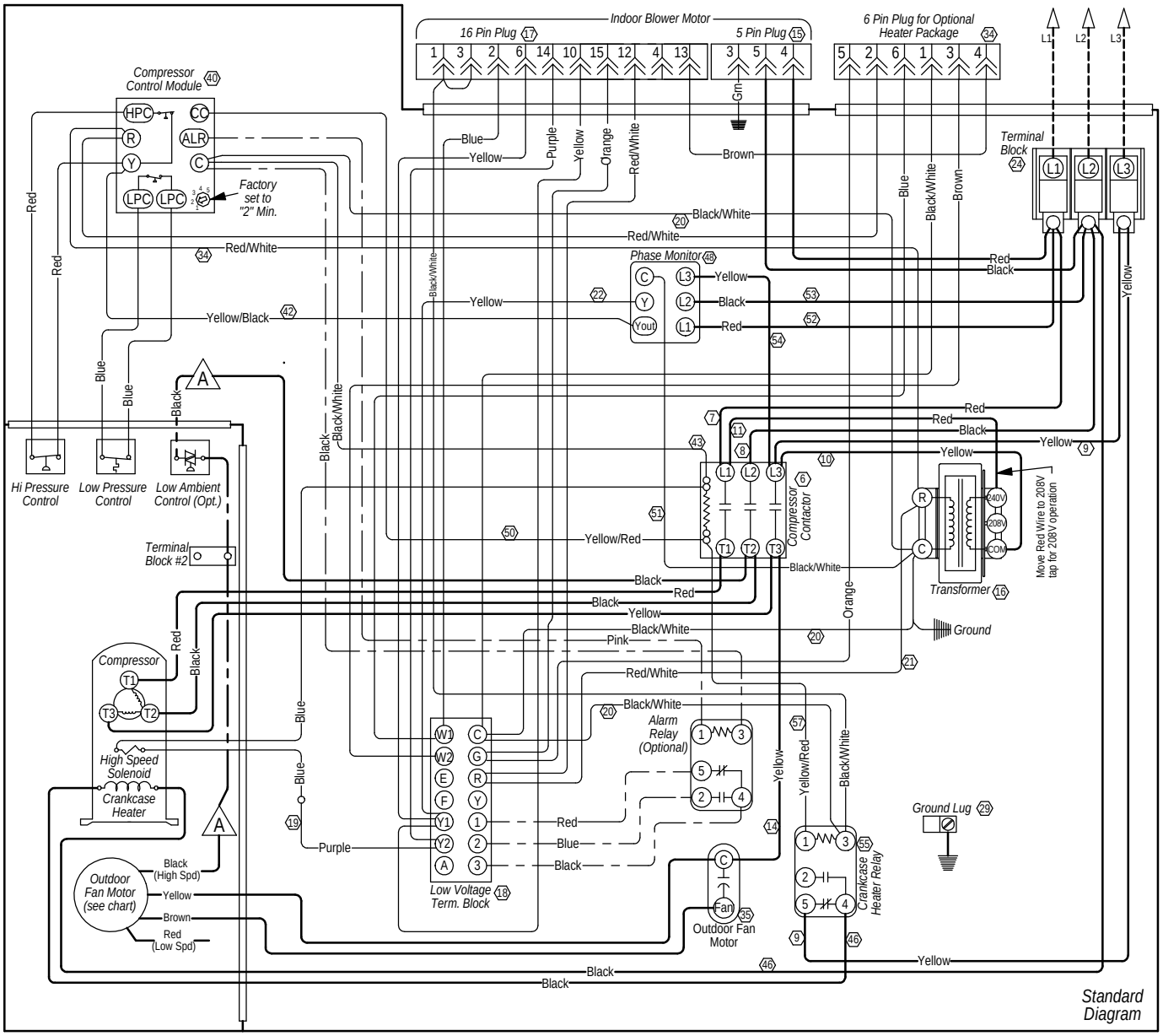

Standard Diagram

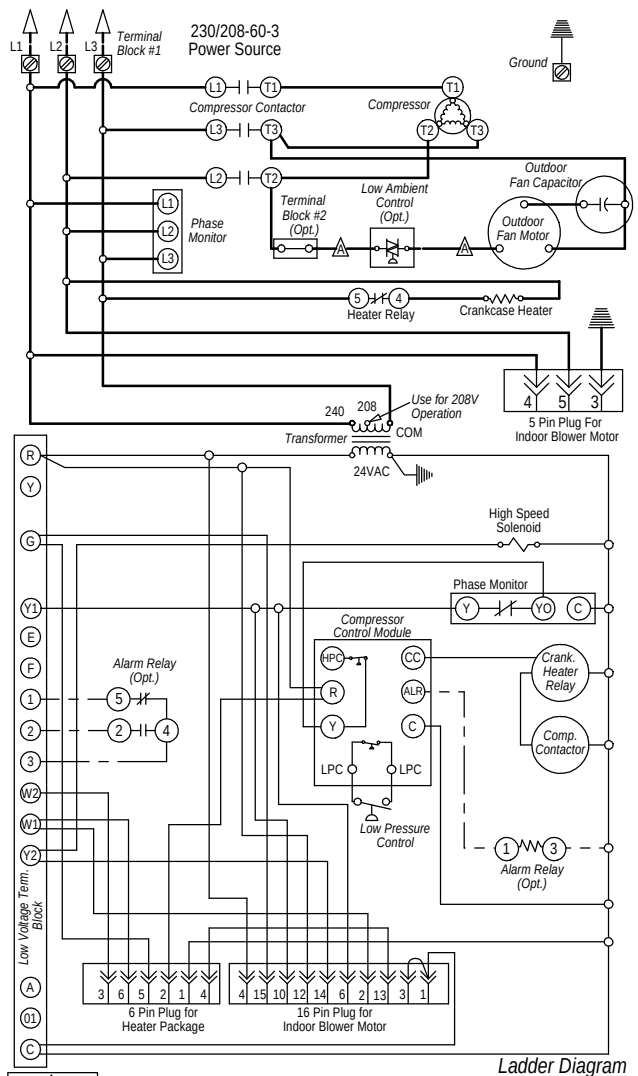

Ladder Diagram

A Wires Connect if Option Not Used	99 Wire Identification numbers for Bard use only.		
	Factory	Field	Optional
High Voltage			
Low Voltage			

WARNING
USE COPPER CONDUCTORS ONLY SUITABLE FOR AT LEAST 75° C.

DANGER
*ELECTRICAL SHOCK HAZARD
*DISCONNECT POWER BEFORE SERVICING.

Bard Mfg. Co.
Bryan, Ohio

4095-253 A