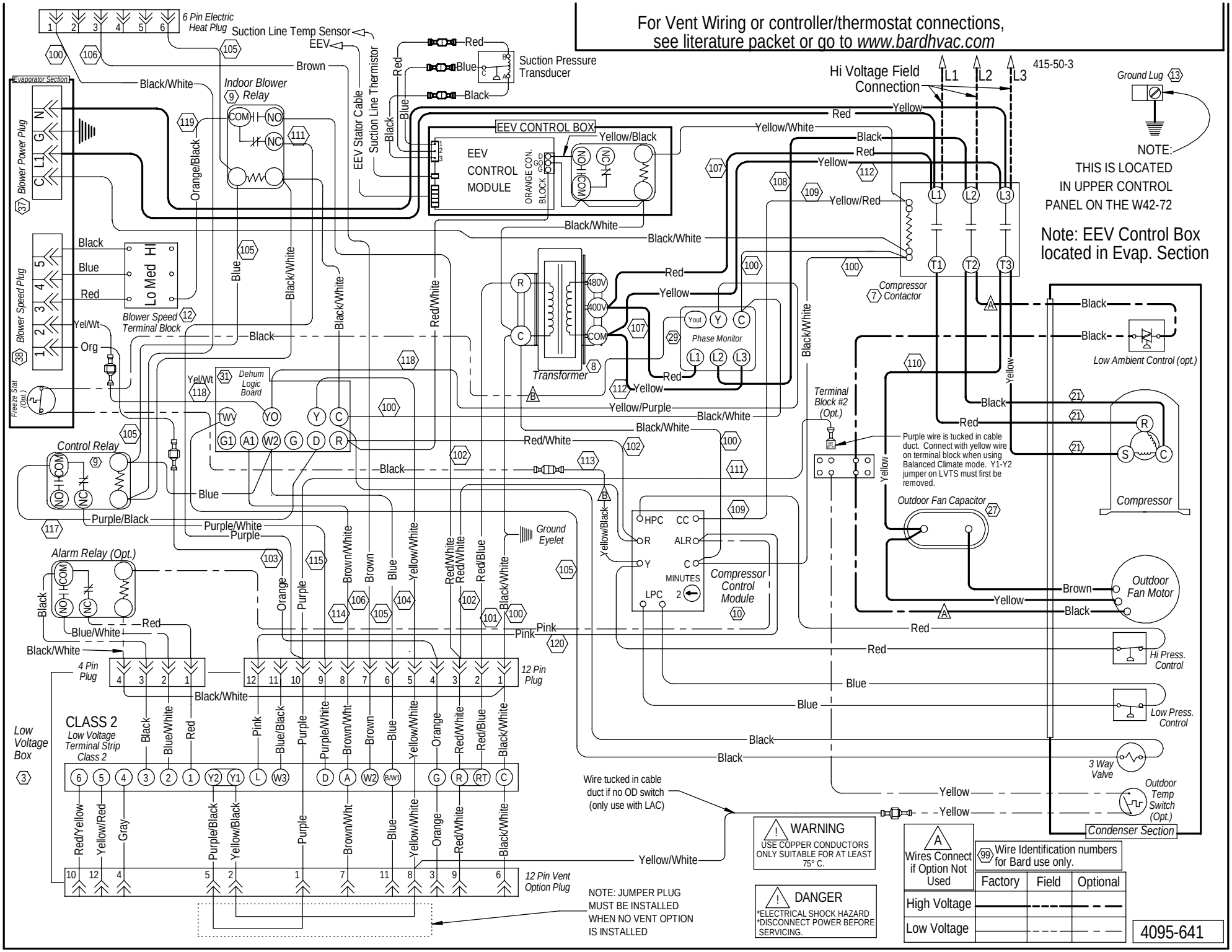For Vent Wiring or controller/thermostat connections, see literature packet or go to *www.bardhvac.com*