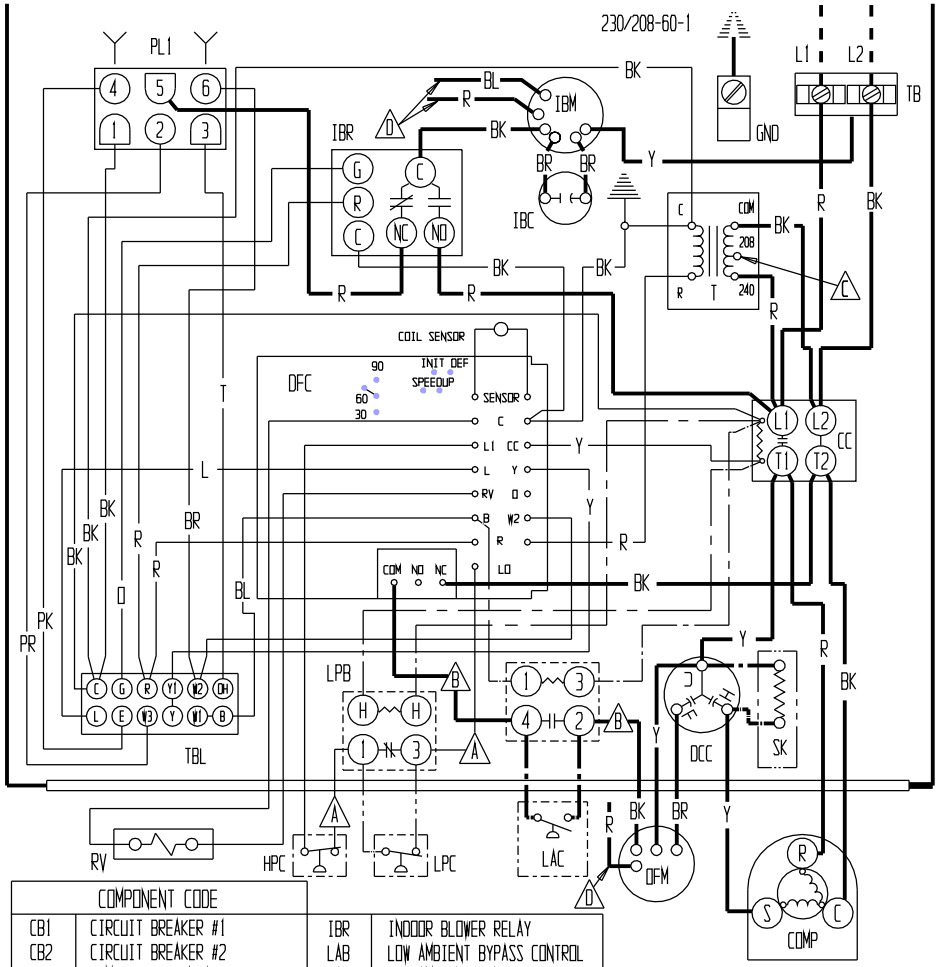

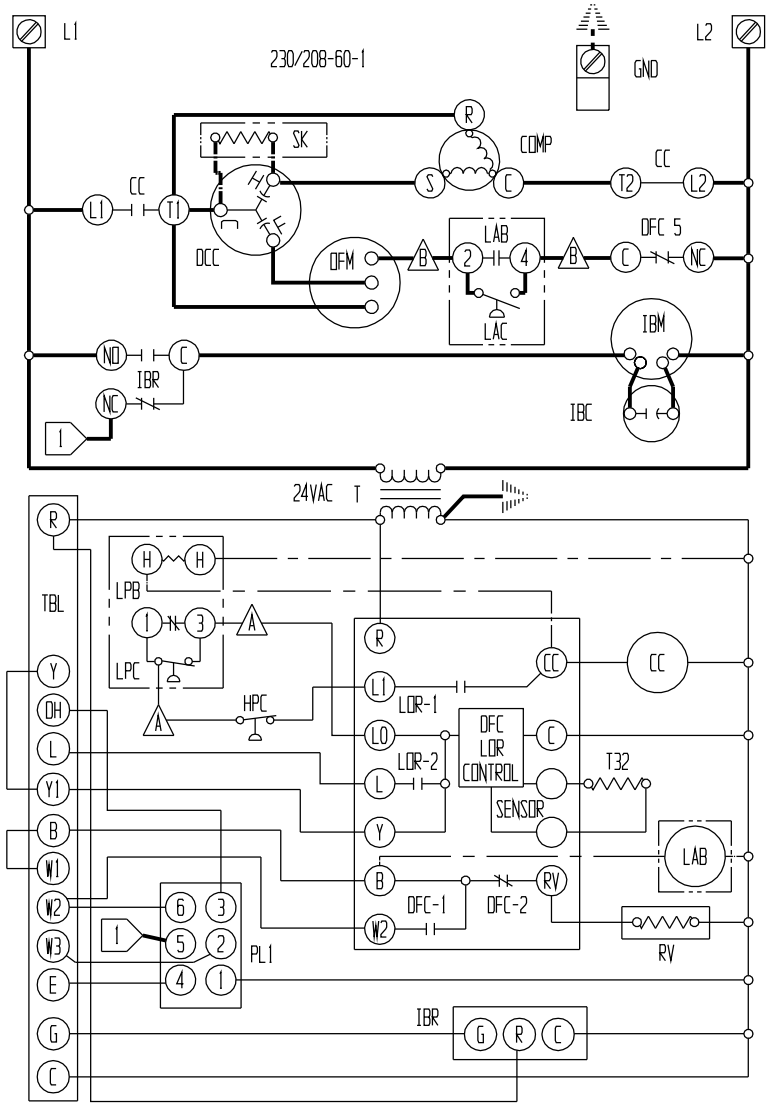

USE COPPER CONDUCTORS ONLY
SUITABLE FOR AT LEAST 75° C

COMPONENT CODE			
CB1	CIRCUIT BREAKER #1	IBR	INDOOR BLOWER RELAY
CB2	CIRCUIT BREAKER #2	LAB	LOW AMBIENT BYPASS CONTROL
CC	COMPRESSOR CONTACTOR	LAC	LOW AMBIENT CONTROL
COMP	COMPRESSOR	LPB	LOW PRESSURE BYPASS
DCC	DUAL CAN CAPACITOR	LPC	LOW PRESSURE CONTROL
DFC	DEFROST CONTROL	LS	LIMIT SWITCH
EHR	EMERGENCY HEAT RELAY	DFM	OUTDOOR FAN MOTOR
GND	EQUIPMENT GROUND	PL1	PLUG #1
H1	HEAT STRIP #1	RV	REV. VALVE SOLINOID
H2	HEAT STRIP #2	SK	START KIT
HC1	HEATER CONTACTOR #1	T	TRANSFORMER
HC2	HEATER CONTACTOR #2	TB	TERMINAL BLOCK
HPC	HIGH PRESSURE CONTROL	TBL	LOW VOLTAGE TERMINAL BLOCK
IBC	INDOOR BLOWER CAPACITOR	TCO	THERMAL CUTOFF
IBM	INDOOR BLOWER MOTOR		

A, B LABELED WIRES CONNECT IF NO OPTIONS USED. C MOVE RED WIRE TO 208V TAP FOR 208V OPERATION D RED (LOW) BLUE (MEDIUM) BLACK (HIGH) WHERE APPLICABLE

	FACTORY STD.	FIELD	OPTIONAL
HIGH VOLTAGE	———	— — —	—·—·—
LOW VOLTAGE	———	— — —	—·—·—
ACCESSORY			—··—··—

COLOR CODE							
BK	BLACK	Y	YELLOW	V	VIOLET	T	TAN
BR	BROWN	G	GREEN	(PR)	PURPLE	PK	PINK
R	RED	BL	BLUE	GY	GRAY	L	LAVENDER
O	ORANGE	W	WHITE	(S)	SLATE		

BARD MFG. CO.

4096-125 A