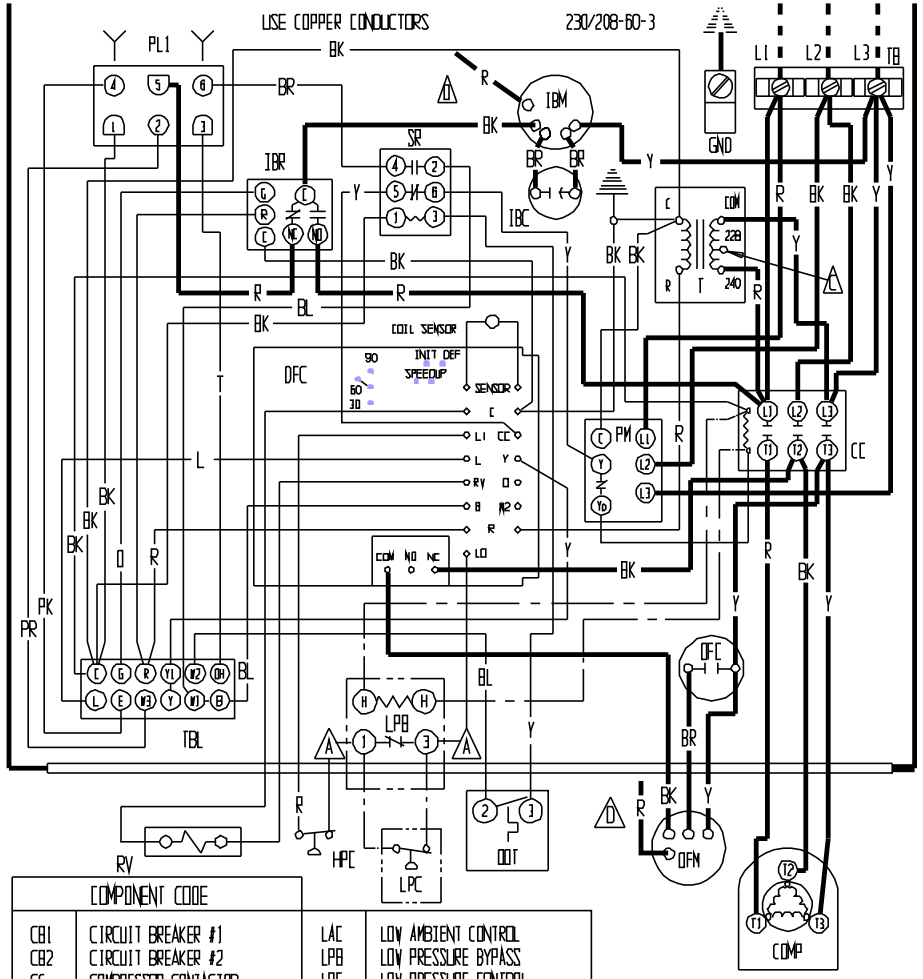

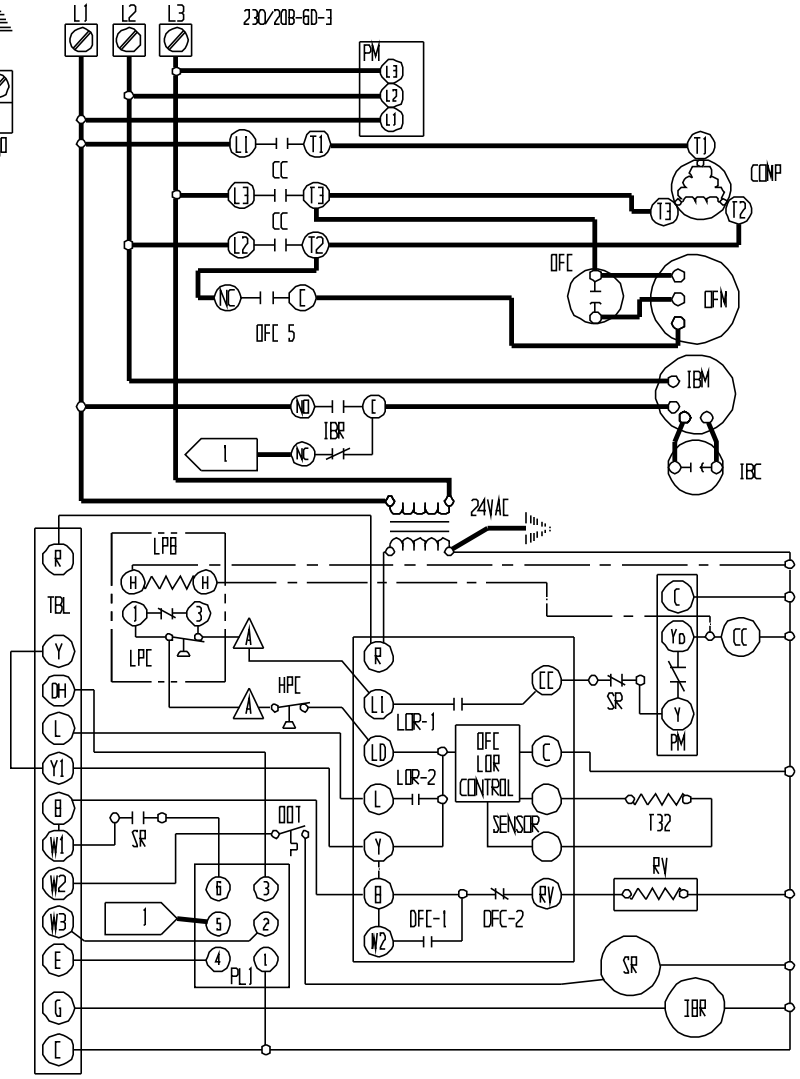

USE COPPER CONDUCTORS ONLY
SUITABLE FOR AT LEAST 75° C

COMPONENT CODE			
CB1	CIRCUIT BREAKER #1	LAC	LOW AMBIENT CONTROL
CB2	CIRCUIT BREAKER #2	LPB	LOW PRESSURE BYPASS
CC	COMPRESSOR CONTACTOR	LPC	LOW PRESSURE CONTROL
CCH	COMPRESSOR CRANKCASE HEATER	LS	LIMIT SWITCH
COMP	COMPRESSOR	OOT	OUTDOOR THERMOSTAT
DFC	DEFROST CONTROL	OFC	OUTDOOR FAN CAPACITOR
GND	EQUIPMENT GROUND	OFM	OUTDOOR FAN MOTOR
H1	HEAT STRIP #1	OFR	OUTDOOR FAN RELAY
H2	HEAT STRIP #2	PL1	PLUG #1
HC1	HEATER CONTACTOR #1	RV	REV. VALVE SOLENOID
HPC	HIGH PRESSURE CONTROL	SR	STAGING RELAY
IBC	INDOOR BLOWER CAPACITOR	T	TRANSFORMER
IBM	INDOOR BLOWER MOTOR	TB	TERMINAL BLOCK
IBR	INDOOR BLOWER RELAY	TBL	LOW VOLTAGE TERMINAL BLOCK
LAB	LOW AMBIENT BYPASS CONTROL	TCO	THERMAL CUTOFF

A LABELED WIRES CONNECT IF NO OPTIONS USED. E MOVE RED WIRE TO 208V TAP FOR 208V OPERATION D BLACK (HIGH) RED (LOW) IF SUPPLIED

	FACTORY STD.	FIELD	OPTIONAL
HIGH VOLTAGE	———	— — —	—·—·—
LOW VOLTAGE	———	— — —	—·—·—
ACCESSORY			—··—··—

COLOR CODE							
BK	BLACK	Y	YELLOW	V	VIOLET	T	TAN
BR	BROWN	G	GREEN	(PR)	PURPLE	PK	PINK
R	RED	BL	BLUE	GY	GRAY	L	LAVENDER
O	ORANGE	W	WHITE	(S)	SLATE		

BARD MFG. CO.

4096-214 C