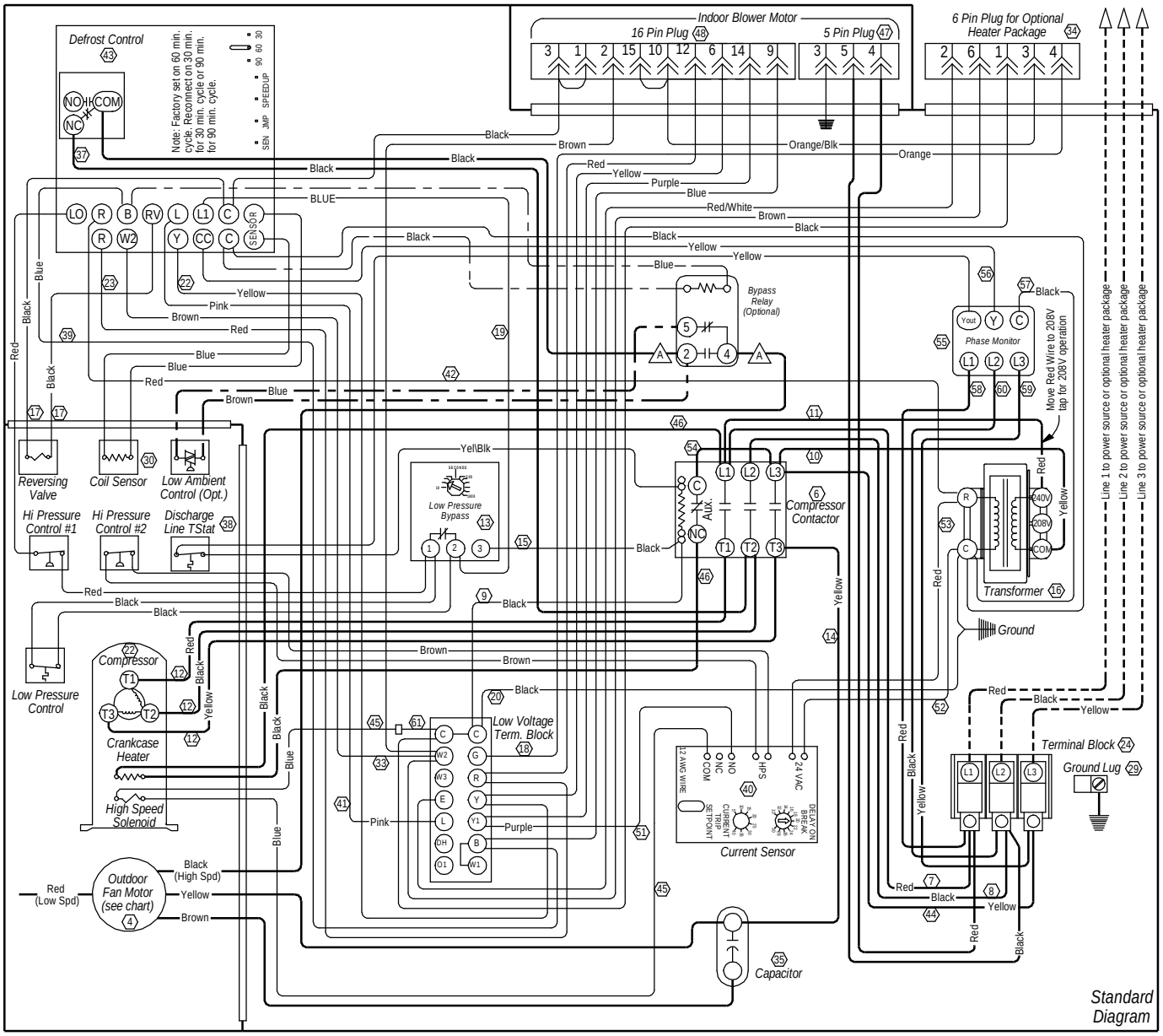

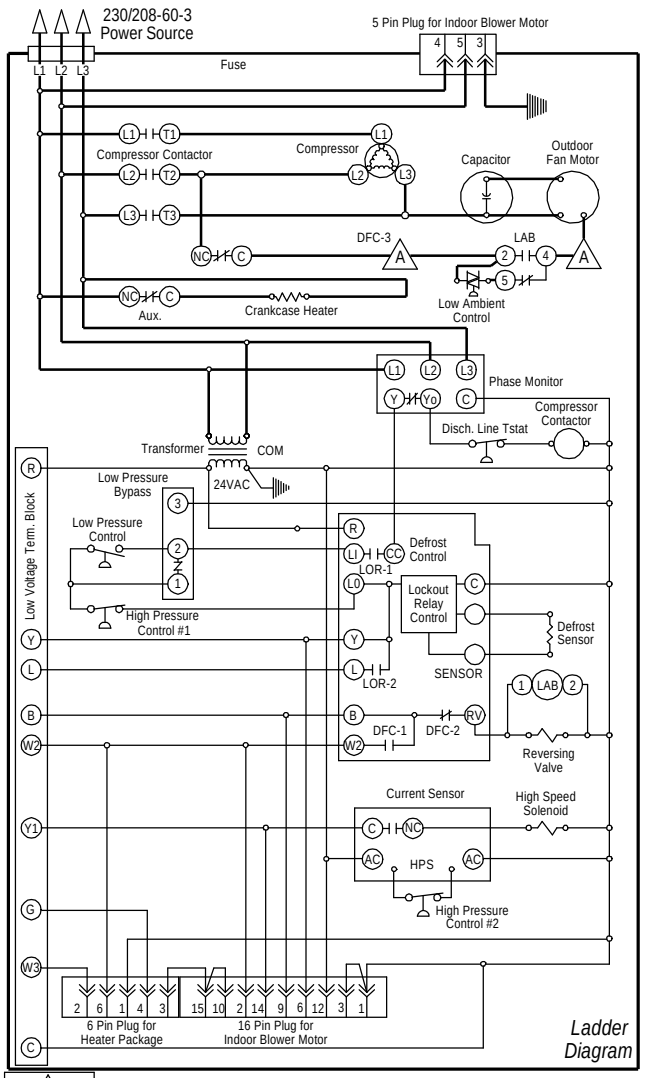

Wires Connect if Option Not Used	Factory	Field	Optional
High Voltage			
Low Voltage			

Wire Identification numbers for Bard use only.

WARNING
USE COPPER CONDUCTORS ONLY SUITABLE FOR AT LEAST 75° C.

DANGER
*ELECTRICAL SHOCK HAZARD
*DISCONNECT POWER BEFORE SERVICING.

Bard Mfg. Co.
Bryan, Ohio

4096-234 C