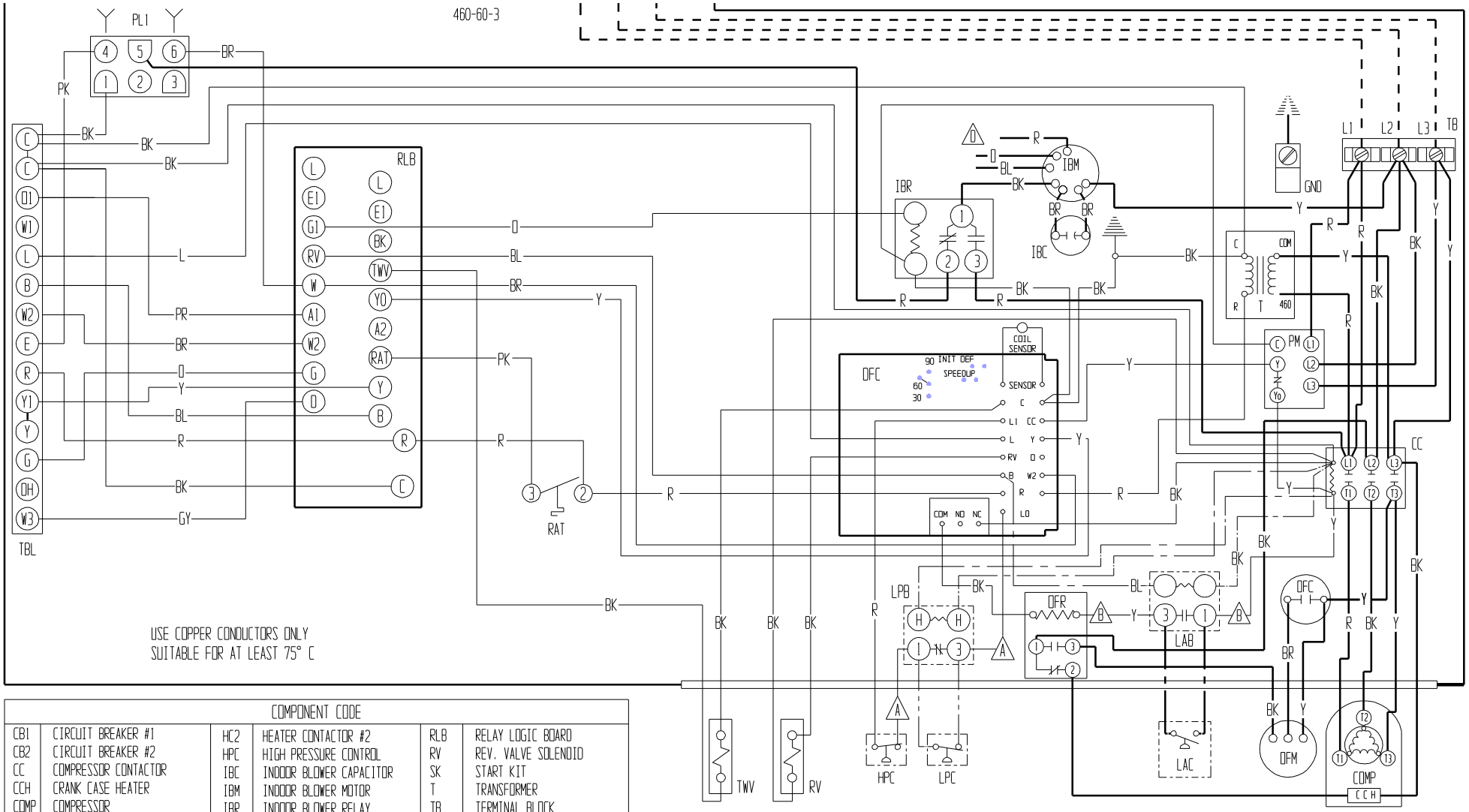

COMPONENT CODE					
CB1	CIRCUIT BREAKER #1	HC2	HEATER CONTACTOR #2	RLB	RELAY LOGIC BOARD
CB2	CIRCUIT BREAKER #2	HPC	HIGH PRESSURE CONTROL	RV	REV. VALVE SOLENOID
CC	COMPRESSOR CONTACTOR	IBC	INDOOR BLOWER CAPACITOR	SK	START KIT
CCH	CRANK CASE HEATER	IBM	INDOOR BLOWER MOTOR	T	TRANSFORMER
COMP	COMPRESSOR	IBR	INDOOR BLOWER RELAY	TB	TERMINAL BLOCK
DCC	DUAL CAN CAPACITOR	LAB	LOW AMBIENT BYPASS CONTROL	TBL	LOW VOLTAGE TERMINAL BLOCK
DFC	DEFROST CONTROL	LAC	LOW AMBIENT CONTROL	TCO	THERMAL CUTOFF
EMR	EMERGENCY HEAT RELAY	LPB	LOW PRESSURE BYPASS	TWV	THREE WAY VALVE
ERV	ENERGY RECOVERY VENTILATOR	LPC	LOW PRESSURE CONTROL		
FT	FREEZE T-STAT	LS	LIMIT SWITCH		
GND	EQUIPMENT GROUND	OFM	OUTDOOR FAN MOTOR		
H1	HEAT STRIP #1	PL1	PLUG #1		
H2	HEAT STRIP #2	RAT	RETURN AIR THERMOSTAT		
HC1	HEATER CONTACTOR #1				

A, B LABELED WIRES CONNECT IF NO OPTIONS USED.

D FOR LOW & MEDIUM SPEEDS CONNECT ORANGE TO BLACK. RED (LOW) OR BLUE (MEDIUM) TO T1 OF IBR. FOR HIGH SPEED TAPE ORANGE, RED, BLUE LEADS SEPARATELY. CONNECT BLACK TO T1 OF IBR.

	FACTORY STD.	FIELD	OPTIONAL
HIGH VOLTAGE	———	— — —	—·—
LOW VOLTAGE	———	— — —	—·—
ACCESSORY			—··—

COLOR CODE							
BK	BLACK	Y	YELLOW	V	VIOLET	T	TAN
BR	BROWN	G	GREEN	(PR)	PURPLE	PK	PINK
R	RED	BL	BLUE	GY	GRAY	L	LAVENDER
O	ORANGE	W	WHITE	(S)	SLATE		

BARD MFG. CO.

4096-329 F