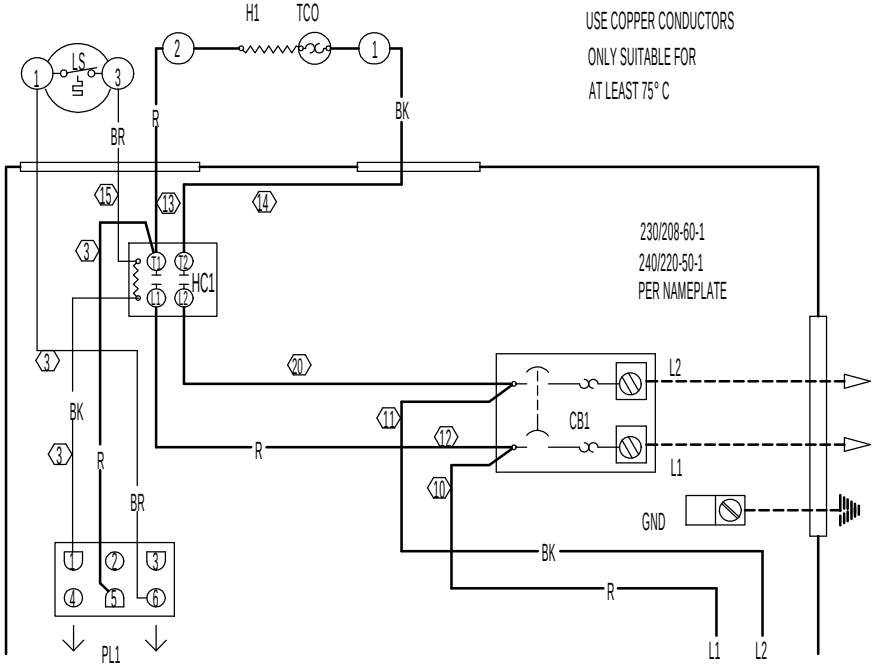
H1
TCO
USE COPPER CONDUCTORS
ONLY SUITABLE FOR
AT LEAST 75° C
LS
BR
R
BK
HC1
230/208-60-1
240/220-50-1
PER NAMEPLATE
CB1
L2
L1
GND
PL1

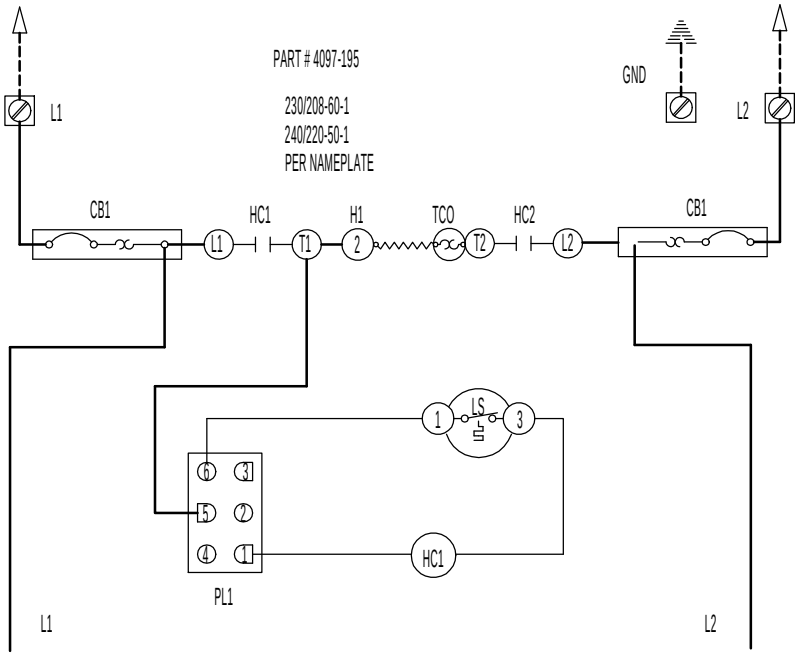
PART # 4097-195
230/208-60-1
240/220-50-1
PER NAMEPLATE
GND
L1
L2
CB1
HC1
H1
TCO
HC2
LS
PL1