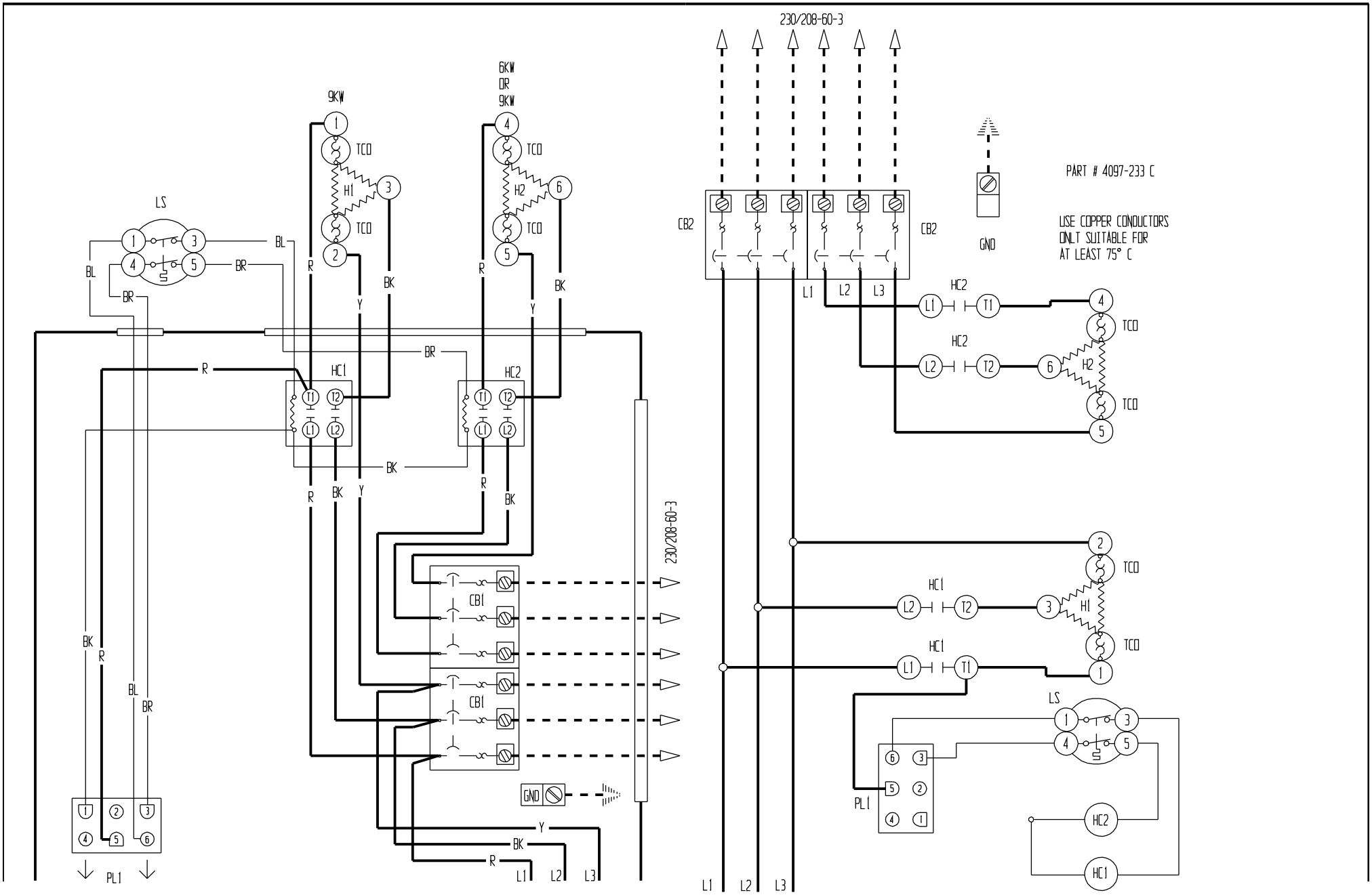
230/208-60-3
PART # 4097-233 C
USE COPPER CONDUCTORS ONLY SUITABLE FOR AT LEAST 75° C
GND
CB2
CB2
L1
L2
L3
HC2
HC1
TCO
H1
H2
LS
PL1
CB1
CB1
6KW OR 9KW
9KW
BL
BR
R
BK
Y