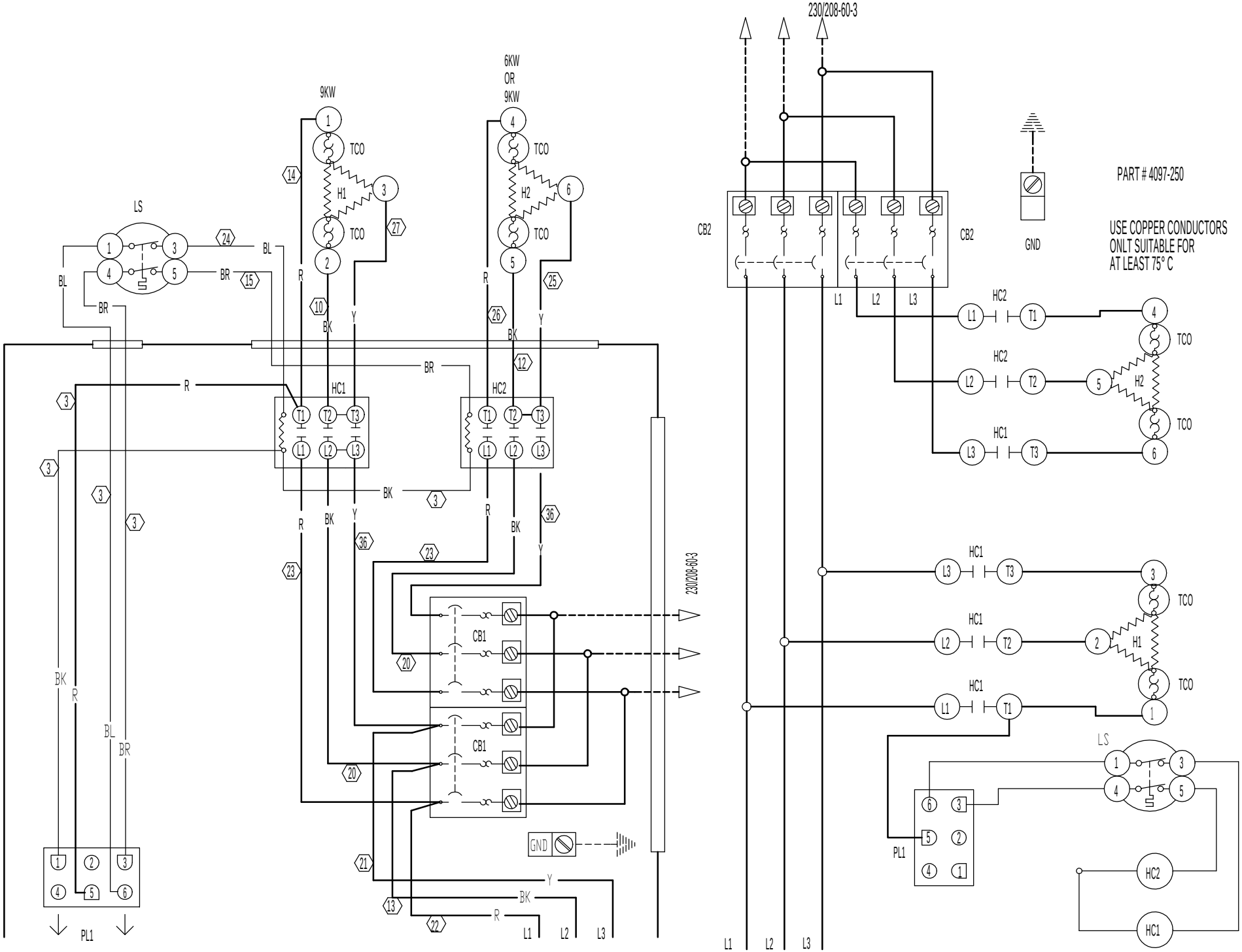
230/208-60-3
9KW
6KW
OR
9KW
TCO
H1
H2
LS
HC1
HC2
CB1
CB2
GND
PL1
L1
L2
L3
T1
T2
T3
BL
BR
R
BK
Y
PART # 4097-250
USE COPPER CONDUCTORS
ONLT SUITABLE FOR
AT LEAST 75° C