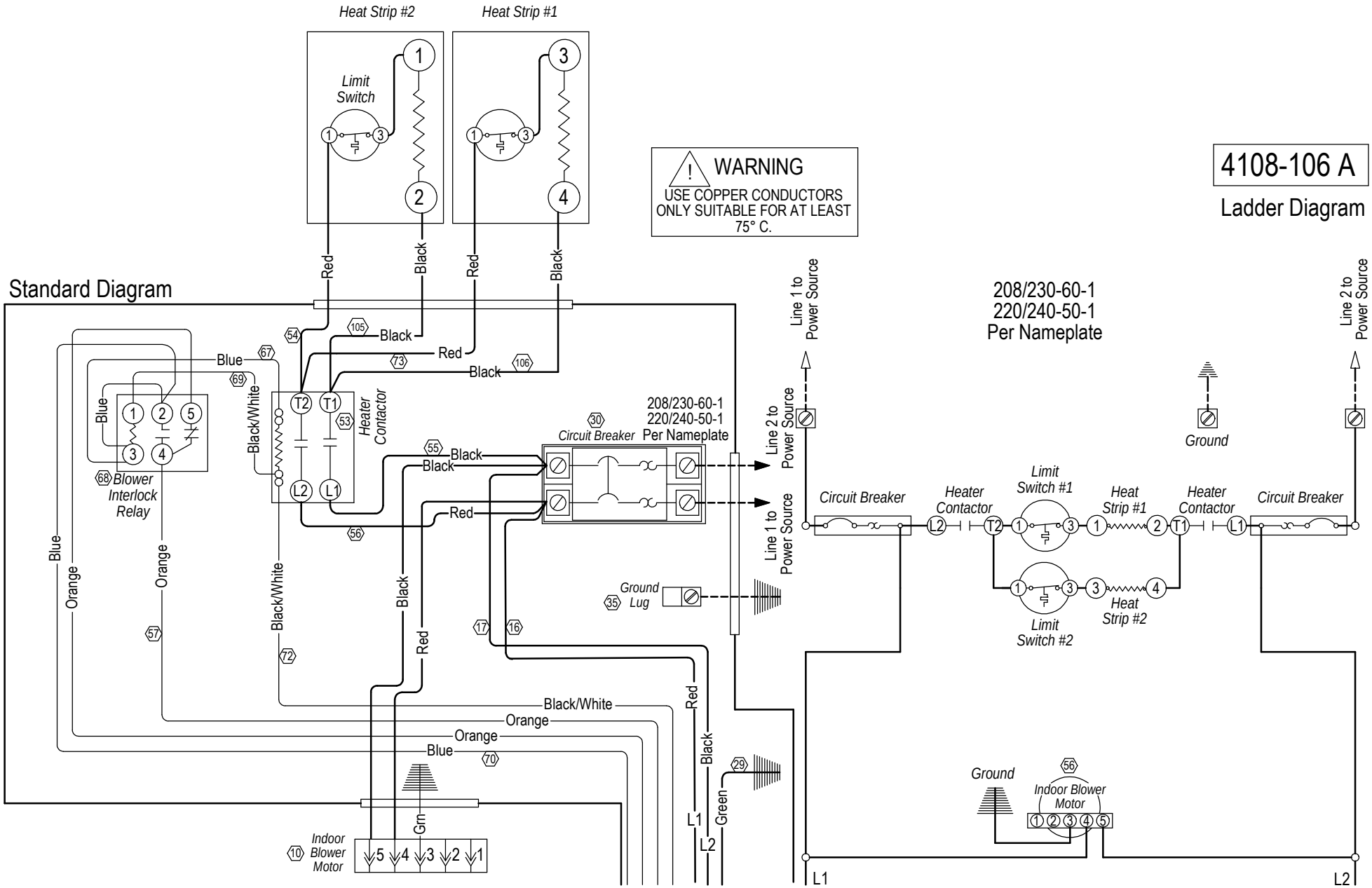
4108-106 A
Ladder Diagram
Standard Diagram
WARNING
USE COPPER CONDUCTORS ONLY SUITABLE FOR AT LEAST 75° C.
Heat Strip #2
Heat Strip #1
Limit Switch
Red
Black
Blue
Orange
Black/White
Green
Grn
Blower Interlock Relay
Heater Contactor
Circuit Breaker
208/230-60-1
220/240-50-1
Per Nameplate
Ground Lug
Indoor Blower Motor
Line 1 to Power Source
Line 2 to Power Source
Ground
Limit Switch #1
Limit Switch #2
Heat Strip #1
Heat Strip #2
L1
L2