Standard Diagram

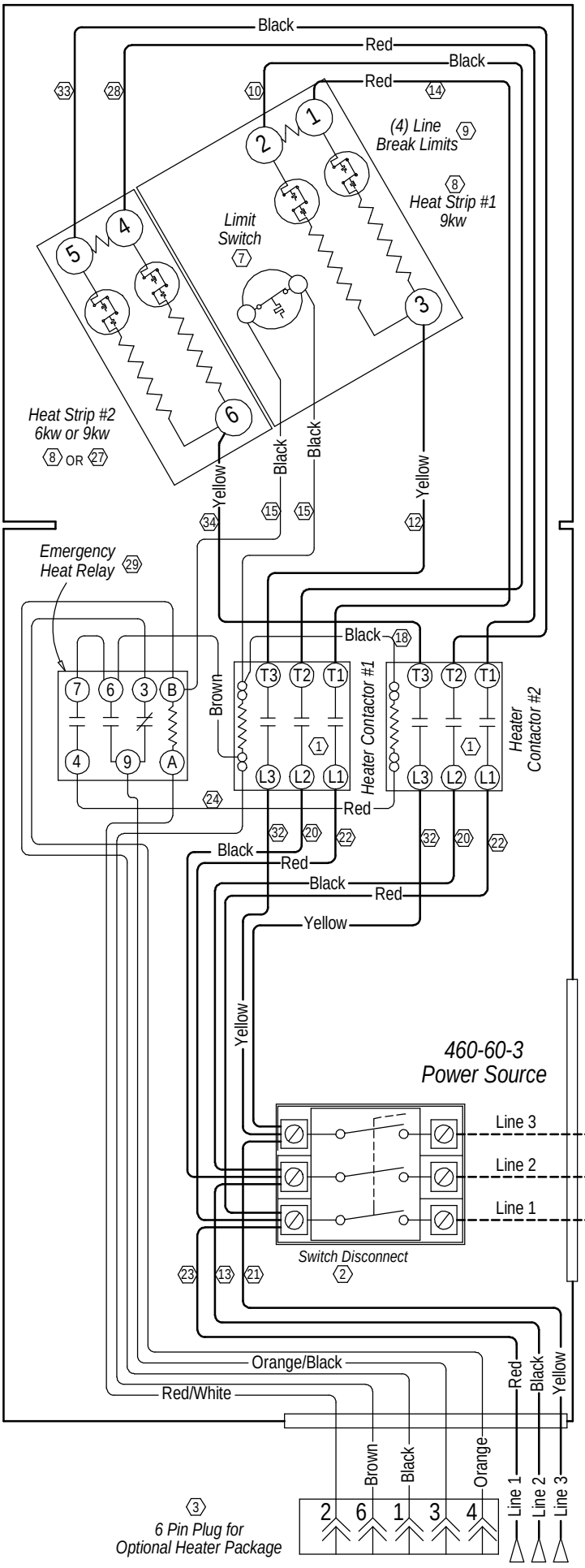

WARNING
USE COPPER CONDUCTORS ONLY SUITABLE FOR AT LEAST 75° C.

DANGER
*ELECTRICAL SHOCK HAZARD
*DISCONNECT POWER BEFORE SERVICING.

4112-302 A

Heater Package Assembly
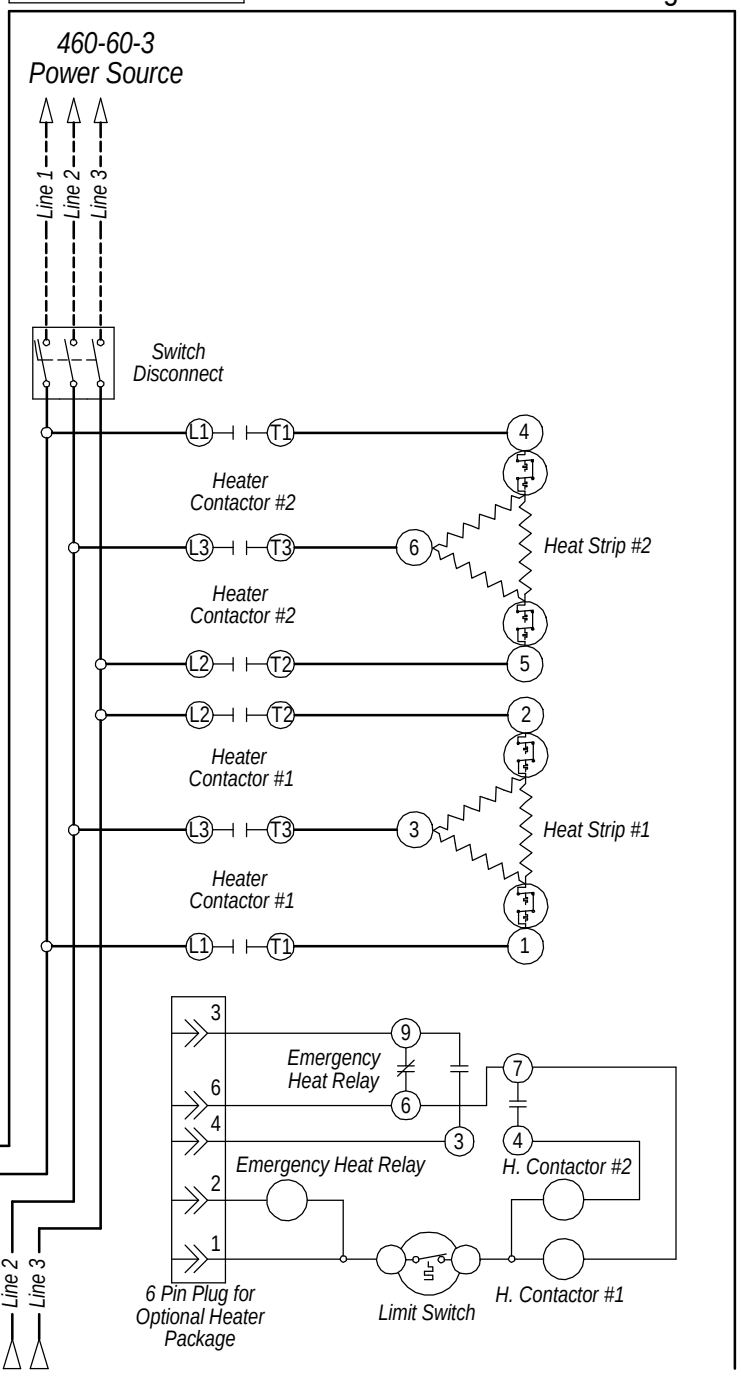
Ladder Diagram