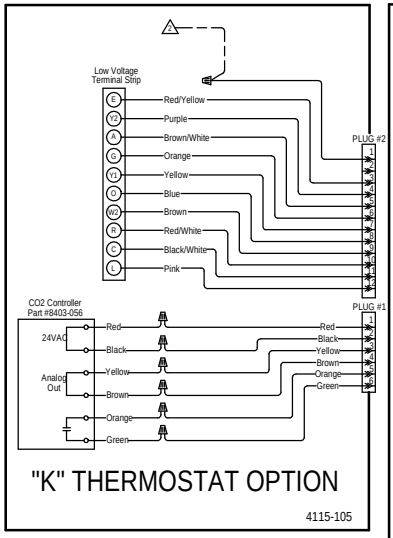

"K" THERMOSTAT OPTION

4115-105

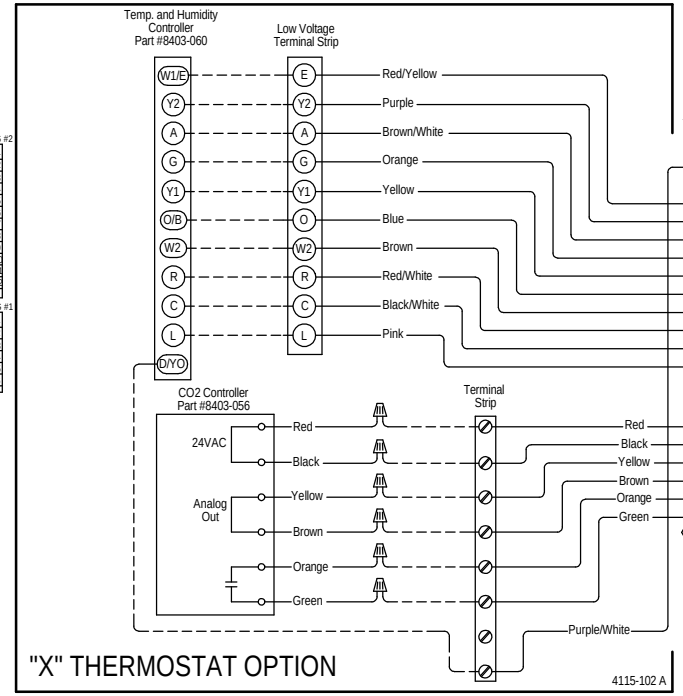

"X" THERMOSTAT OPTION

4115-102 A

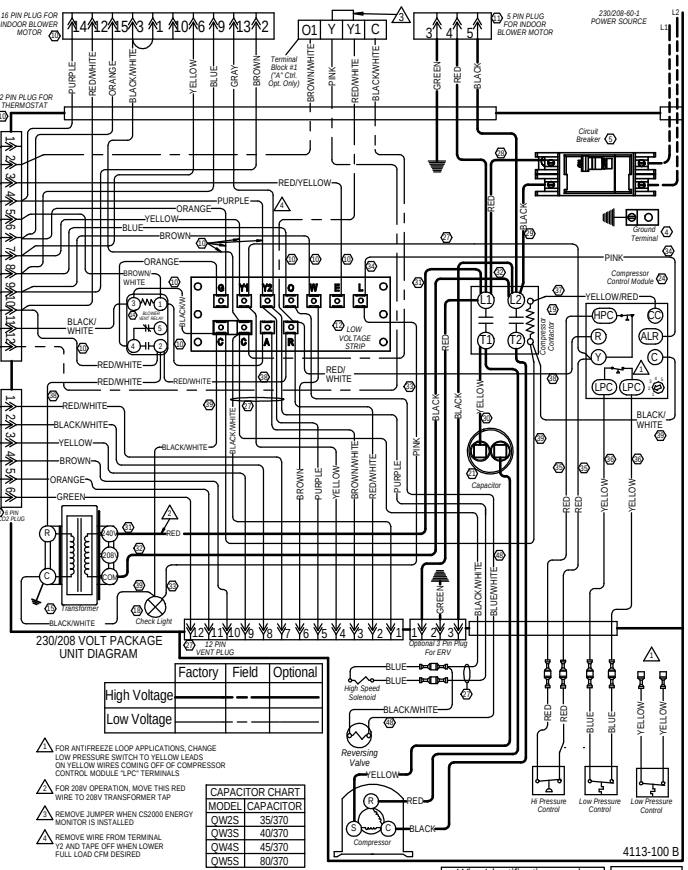

230/208 VOLT PACKAGE UNIT DIAGRAM

	Factory	Field	Optional
High Voltage			
Low Voltage			

1. FOR ANTIFREEZE LOOP APPLICATIONS, CHANGE LOW PRESSURE SWITCH TO YELLOW LEADS ON YELLOW WIRES COMING OFF OF COMPRESSOR CONTROL MODULE "LPC" TERMINALS
2. FOR 208V OPERATION, MOVE THIS RED WIRE TO 208V TRANSFORMER TAP
3. REMOVE JUMPER WHEN CS2000 ENERGY MONITOR IS INSTALLED
4. REMOVE WIRE FROM TERMINAL Y2 AND TAPE OFF WHEN LOWER FULL LOAD CFM DESIRED

CAPACITOR CHART	
MODEL	CAPACITOR
QW2S	35/370
QW3S	40/370
QW4S	45/370
QW5S	80/370

4113-100 B

Wire Identification numbers for Bard use only.

DANGER
ELECTRICAL SHOCK HAZARD
DISCONNECT POWER BEFORE SERVICING.

WARNING
USE COPPER CONDUCTORS ONLY SUITABLE FOR AT LEAST 75° C.

Bard Mfg. Co.
Bryan, Ohio

4113C100 C

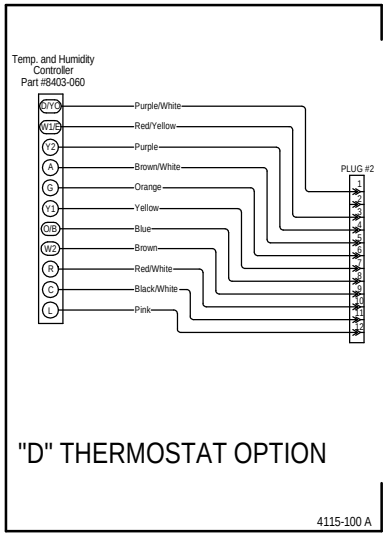

"D" THERMOSTAT OPTION

4115-100 A

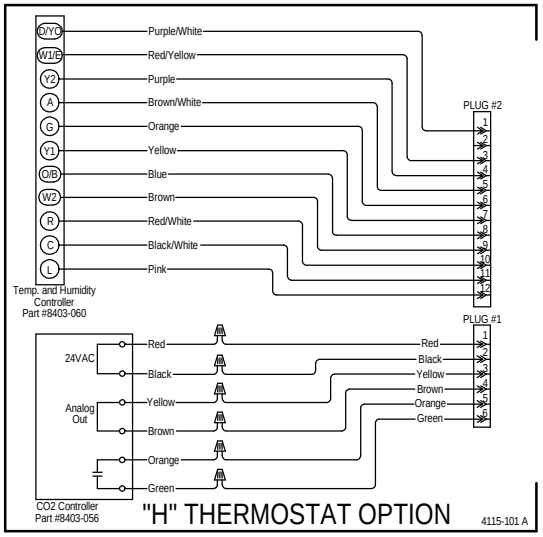

"H" THERMOSTAT OPTION

4115-101 A

COMPOSITE WIRING DIAGRAM 230/208-60-1