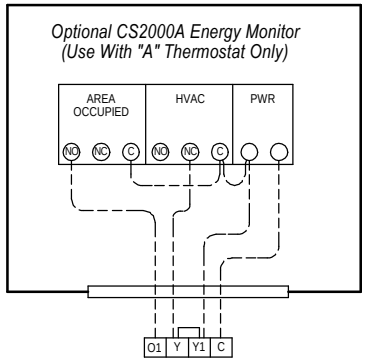

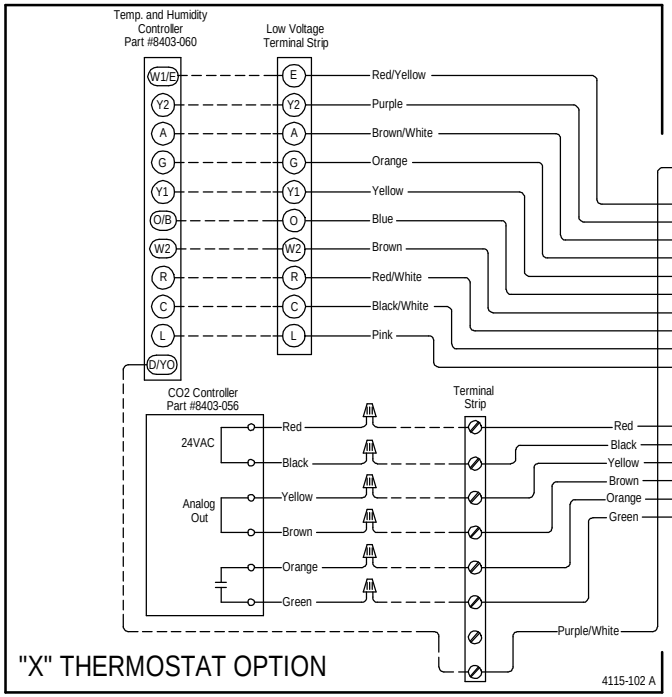

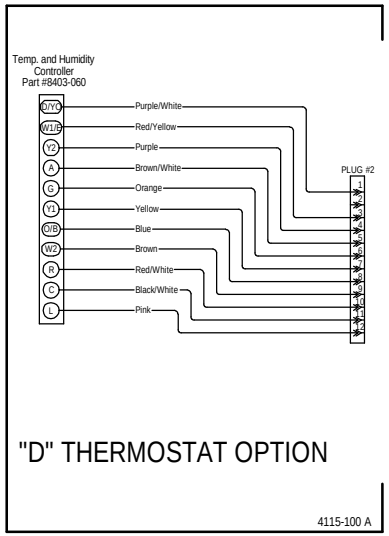

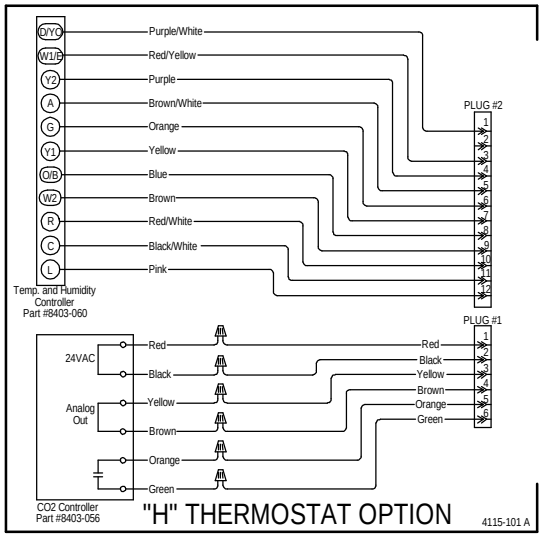

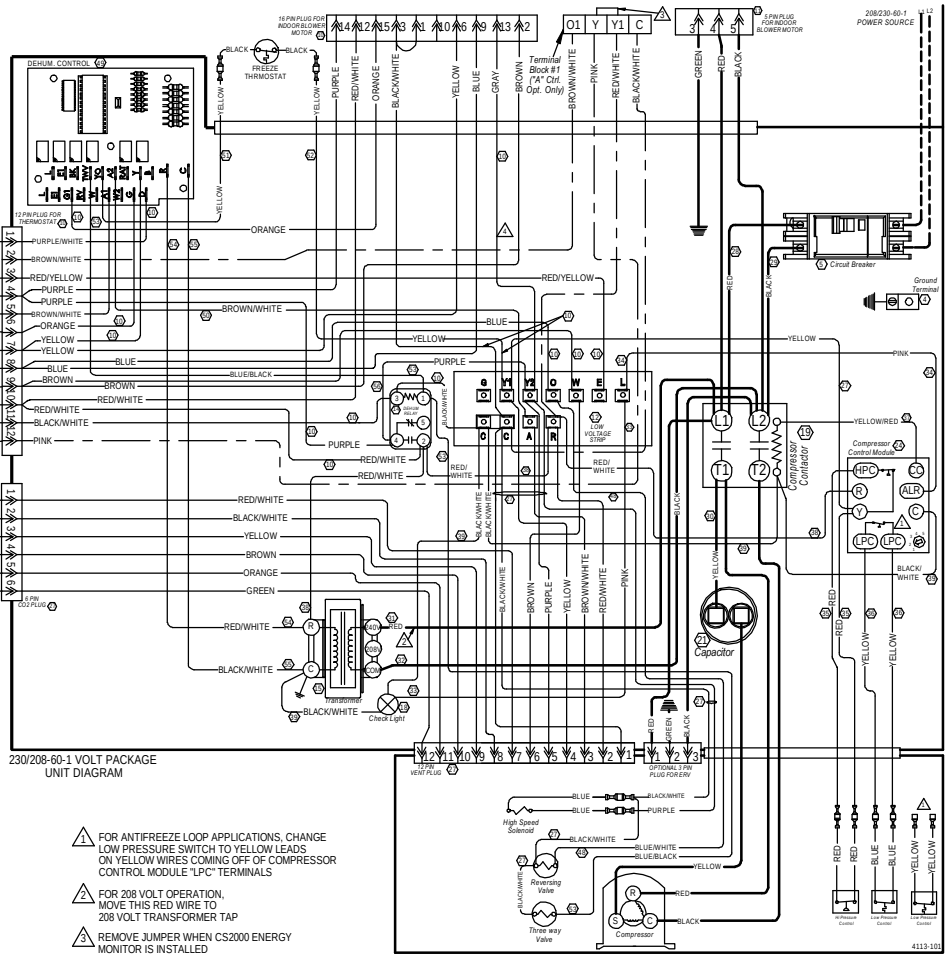

230/208-60-1 VOLT PACKAGE UNIT DIAGRAM

1. FOR ANTIFREEZE LOOP APPLICATIONS, CHANGE LOW PRESSURE SWITCH TO YELLOW LEADS ON YELLOW WIRES COMING OFF OF COMPRESSOR CONTROL MODULE "LPC" TERMINALS
2. FOR 208 VOLT OPERATION, MOVE THIS RED WIRE TO 208 VOLT TRANSFORMER TAP
3. REMOVE JUMPER WHEN CS2000 ENERGY MONITOR IS INSTALLED
4. REMOVE WIRE FROM TERMINAL Y2 AND TAPE OFF WHEN LOWER FULL LOAD CFM DESIRED

CAPACITOR CHART	
MODEL	CAPACITOR
QW2S	35/370
QW3S	40/370
QW4S	45/370
QW5S	80/370

DANGER
*ELECTRICAL SHOCK HAZARD
*DISCONNECT POWER BEFORE SERVICING.

99 Wire Identification numbers for Bard use only.

WARNING
USE COPPER CONDUCTORS ONLY SUITABLE FOR AT LEAST 75° C.

	Factory	Field	Optional
High Voltage			
Low Voltage			

Bard Mfg. Co.
Bryan, Ohio
4113C101

COMPOSITE WIRING DIAGRAM 230/208/60-1