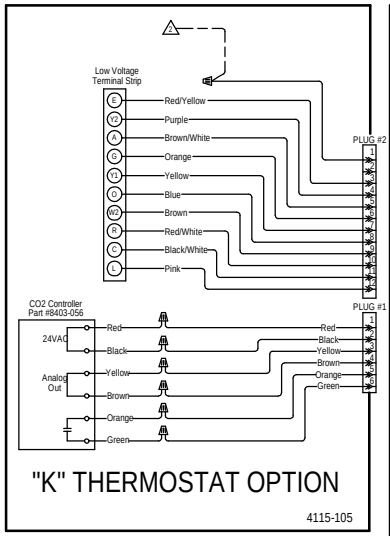

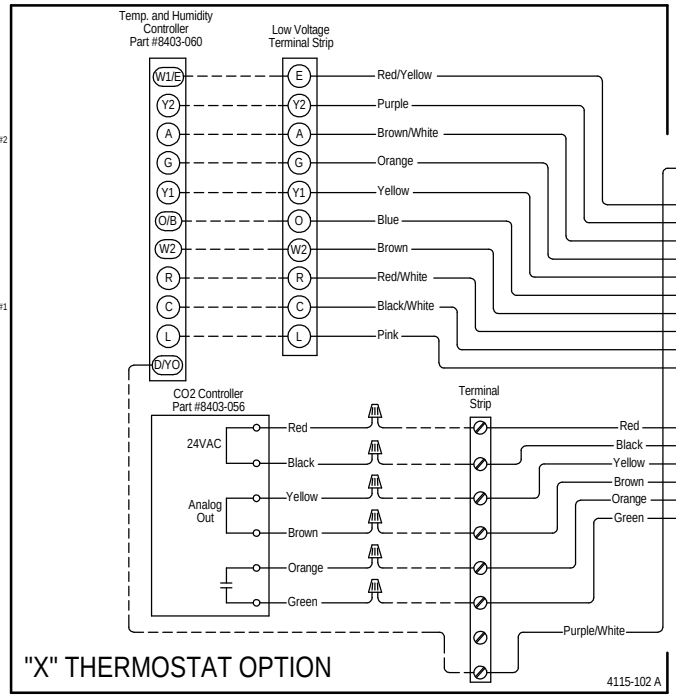

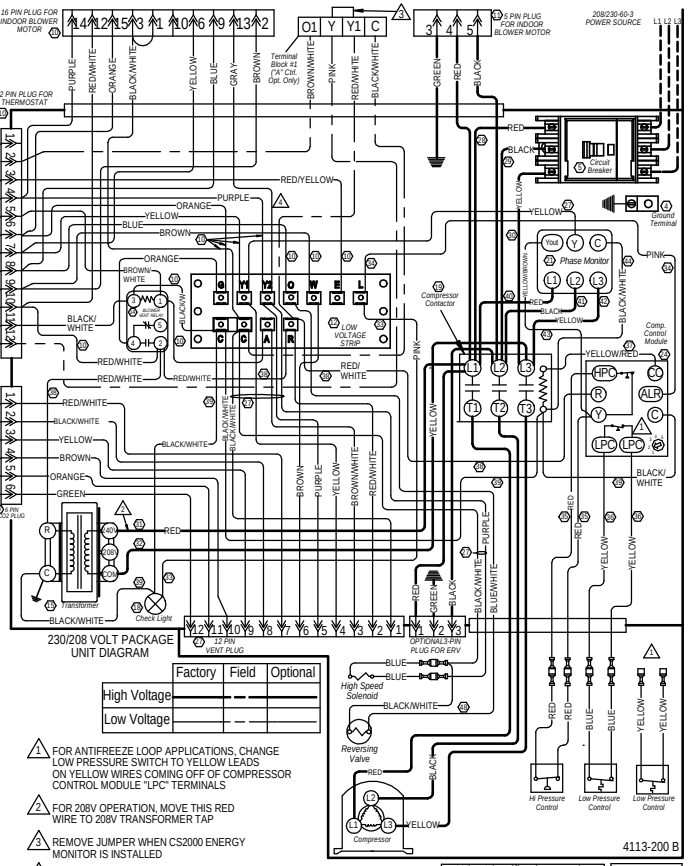

230/208 VOLT PACKAGE UNIT DIAGRAM

	Factory	Field	Optional
High Voltage			
Low Voltage			

1. FOR ANTIFREEZE LOOP APPLICATIONS, CHANGE LOW PRESSURE SWITCH TO YELLOW LEADS ON YELLOW WIRES COMING OFF OF COMPRESSOR CONTROL MODULE "LPC" TERMINALS
2. FOR 208V OPERATION, MOVE THIS RED WIRE TO 208V TRANSFORMER TAP
3. REMOVE JUMPER WHEN CS2000 ENERGY MONITOR IS INSTALLED
4. REMOVE WIRE FROM TERMINAL Y2 AND TAPE OFF WHEN LOWER FULL LOAD CFM DESIRED

Wire Identification numbers for Bard use only.

DANGER
*ELECTRICAL SHOCK HAZARD
*DISCONNECT POWER BEFORE SERVICING

WARNING
USE COPPER CONDUCTORS ONLY SUITABLE FOR AT LEAST 75° C.

Bard Mfg. Co.
Bryan, Ohio
4113C200 C
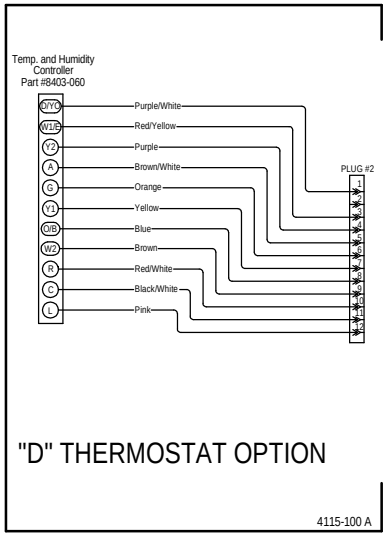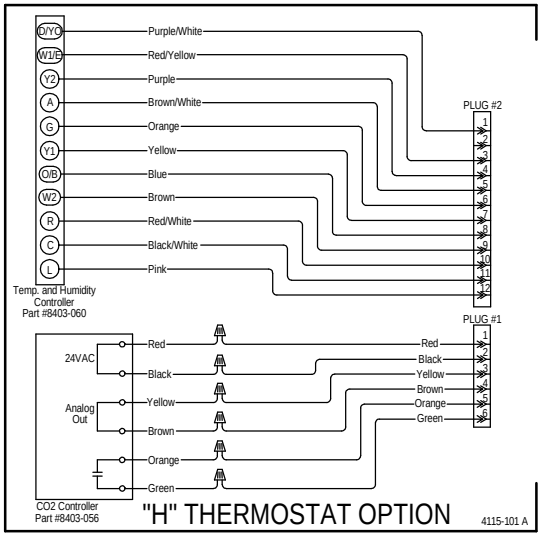
COMPOSITE WIRING DIAGRAM 208/230-60-3