COMPOSITE WIRING DIAGRAM
460/60-3

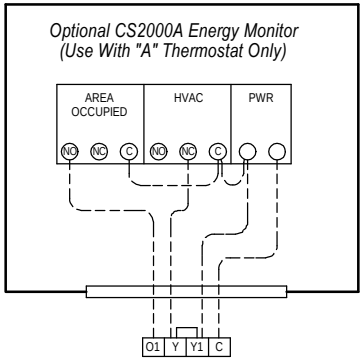

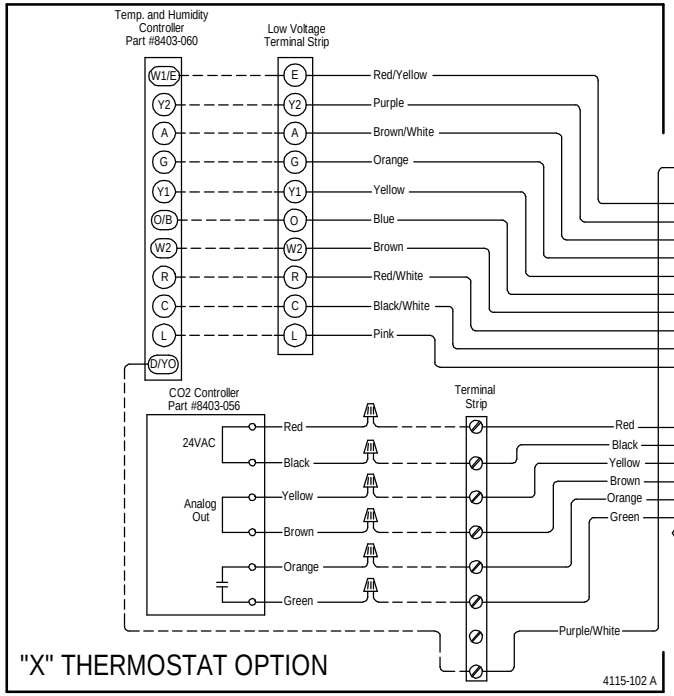

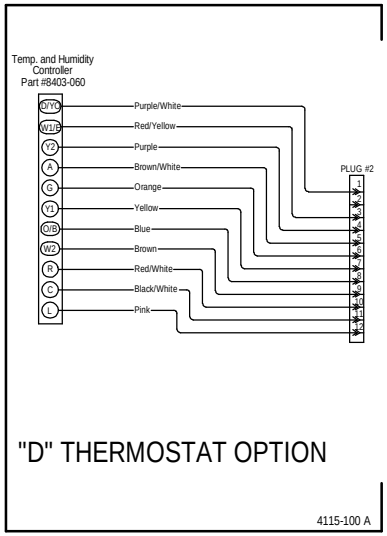

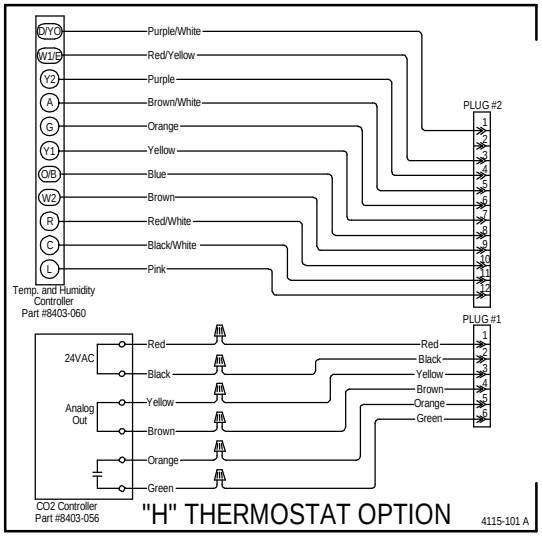

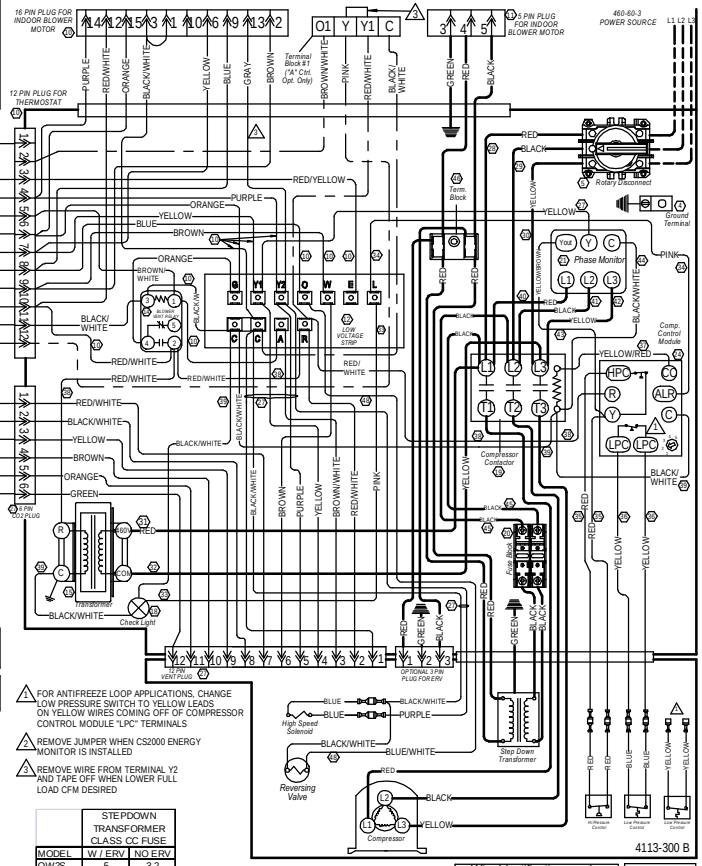

1. FOR ANTIFREEZE LOOP APPLICATIONS, CHANGE LOW PRESSURE SWITCH TO YELLOW LEADS ON YELLOW WIRES COMING OFF OF COMPRESSOR CONTROL MODULE "LPC" TERMINALS
2. REMOVE JUMPER WHEN CS2000 ENERGY MONITOR IS INSTALLED
3. REMOVE WIRE FROM TERMINAL Y2 AND TAPE OFF WHEN LOWER FULL LOAD CFM DESIRED

	STEPDOWN TRANSFORMER CLASS CC FUSE	
MODEL	W / ERV	NO ERV
QW2S	5	3.2
QW3S	5	3.2
QW4S	7	3.2
QW5S	7	5

	Factory	Field	Optional
High Voltage			
Low Voltage			

Wire Identification numbers for Bard use only.

DANGER
*ELECTRICAL SHOCK HAZARD
*DISCONNECT POWER BEFORE SERVICING.

WARNING
USE COPPER CONDUCTORS ONLY SUITABLE FOR AT LEAST 75° C.

Bard Mfg. Co.
Bryan, Ohio

4113C300 B