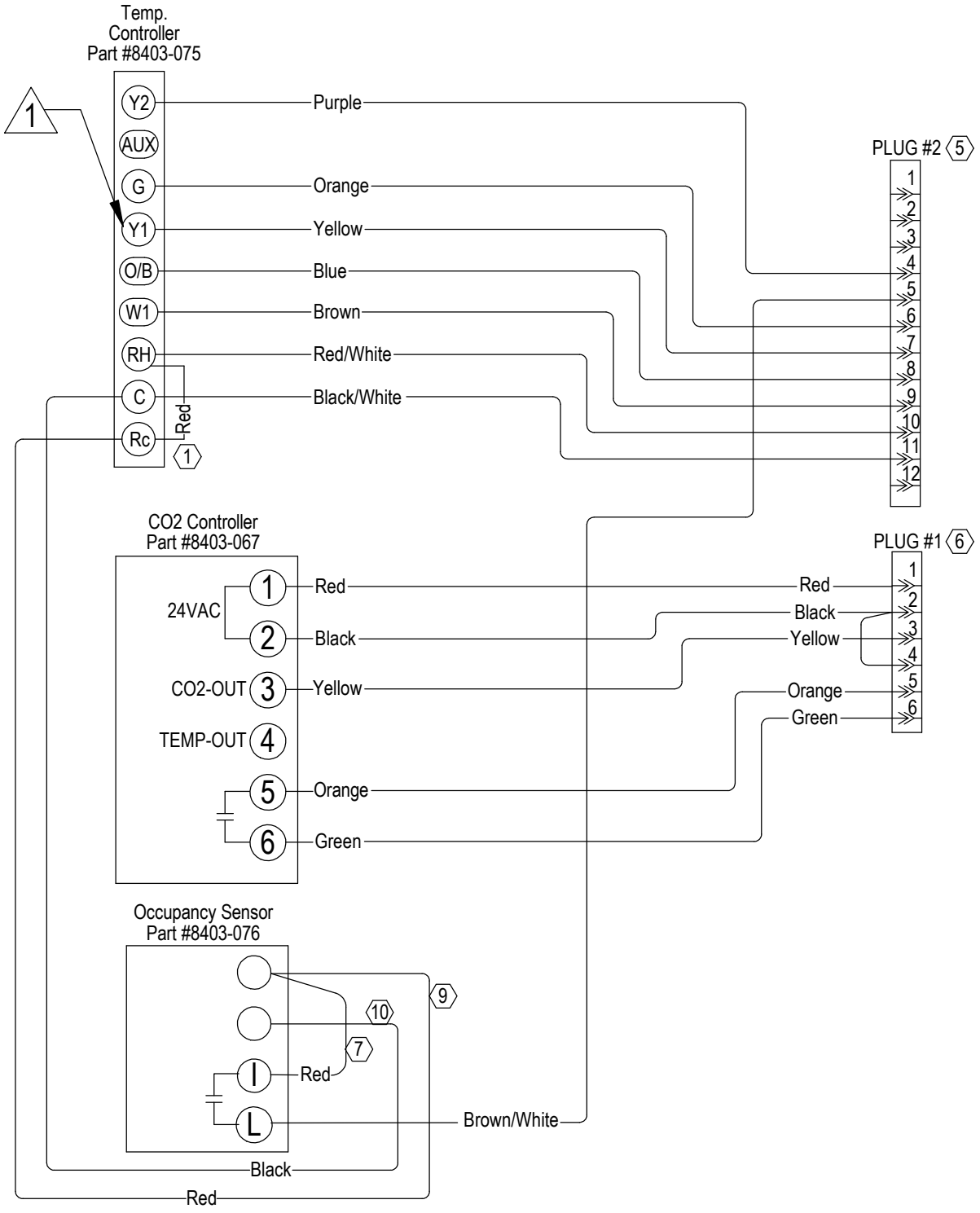
Temp.
Controller
Part #8403-075
1
Y2
AUX
G
Y1
O/B
W1
RH
C
Rc
Red
1
Purple
Orange
Yellow
Blue
Brown
Red/White
Black/White
PLUG #2 5
1
2
3
4
5
6
7
8
9
10
11
12
CO2 Controller
Part #8403-067
24VAC
1
2
CO2-OUT 3
TEMP-OUT 4
5
6
Red
Black
Yellow
Orange
Green
PLUG #1 6
1
2
3
4
5
6
Red
Black
Yellow
Orange
Green
Occupancy Sensor
Part #8403-076
9
10
7
I
L
Red
Brown/White
Black
Red

4115-115 A