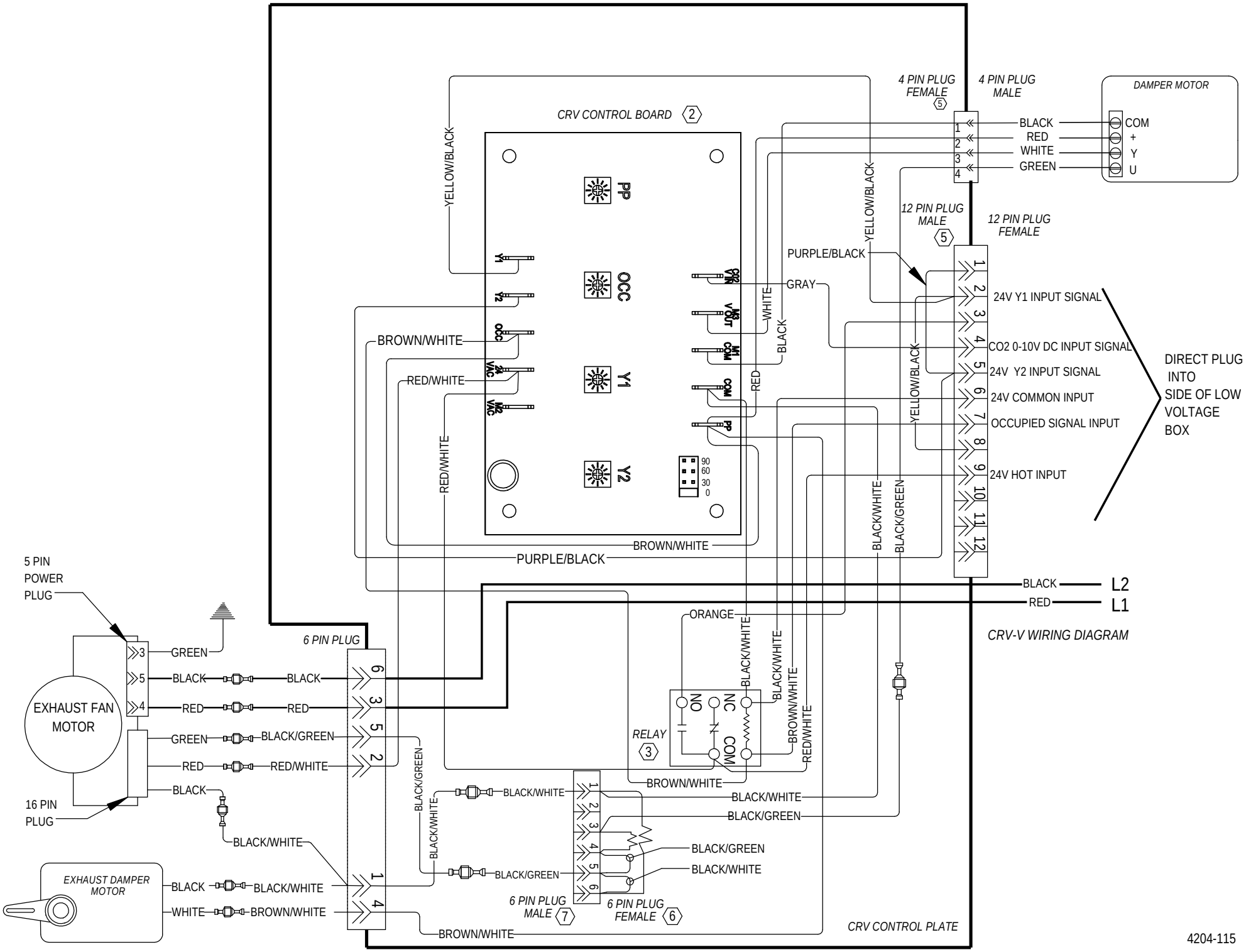
CRV CONTROL BOARD 2
PP
OCC
Y1
Y2
CO2 0-10V
W3 VOUT
W1 COM
COM
PP
Y1
Y2
OCC
24V VAC
W2 VAC
90
60
30
0
4 PIN PLUG FEMALE 5
4 PIN PLUG MALE
DAMPER MOTOR
BLACK
RED
WHITE
GREEN
COM
+
Y
U
12 PIN PLUG MALE 5
12 PIN PLUG FEMALE
24V Y1 INPUT SIGNAL
CO2 0-10V DC INPUT SIGNAL
24V Y2 INPUT SIGNAL
24V COMMON INPUT
OCCUPIED SIGNAL INPUT
24V HOT INPUT
DIRECT PLUG INTO SIDE OF LOW VOLTAGE BOX
YELLOW/BLACK
PURPLE/BLACK
GRAY
WHITE
BLACK
RED
BROWN/WHITE
RED/WHITE
BLACK/WHITE
BLACK/GREEN
PURPLE/BLACK
L2
L1
ORANGE
CRV-V WIRING DIAGRAM
5 PIN POWER PLUG
EXHAUST FAN MOTOR
16 PIN PLUG
6 PIN PLUG
GREEN
BLACK
RED
BLACK/GREEN
RED/WHITE
RELAY 3
NO
NC
COM
6 PIN PLUG MALE 7
6 PIN PLUG FEMALE 6
EXHAUST DAMPER MOTOR
WHITE
CRV CONTROL PLATE
4204-115