MANUAL 2100-045C

SINGLE PACKAGE HEAT PUMP INSTALLATION INSTRUCTIONS

MODELS

PH25	PH421
PH314	PH484
PH364	PH605

FOR RESIDENTIAL AND COMMERCIAL HEATING / COOLING APPLICATIONS

ELECTRICAL DATA

Model	Rated Volts ϕ PH	Operating Voltage Range	Max. Unit Amps	Req'd Maximum External Fuse or Ckt. Breaker* Ckt. A	Minimum Circuit Ampacity Ckt. A	Field Power Wiring** Ckt. A	Ground Wire Size** Ckt. A
PH25	230/208-1	197-253	14.8	30	20	12	10
PH314	230/208-1	197-253	18.4	35	24	10	10
PH364	230/208-1	197-253	24.9	45	30	10	10
PH364-B	230/208-3	187-253	16.9	30	20	12	10
PH364-C +	460-3	414-506	8.4	15	15	14	14
PH421	230/208-1	197-253	28.0	50	35	8	10
PH421-B	230/208-3	187-253	21.8	35	26	10	10
PH421-C +	460-3	414-506	11	20	15	14	14
PH484	230/208-1	197-253	30	60	38	8	10
PH484-B	230/208-3	187-253	22	40	26	10	10
PH484-C +	460-3	414-506	12.5	20	15	14	14
PH605	230/208-1	197-253	37.5	60	45	6	10
PH605-B	230/208-3	187-253	26.5	50	31	8	10
PH605-C +	460-3	414-506	13.3	25	16	12	14

*Maximum time delay fuse or HACR type circuit breaker. HACR type not applicable to 460 volt.
**60°C copper wire size, basic unit only.
+460 volt not U.L. listed.

OPTIONAL FIELD-INSTALLED ELECTRIC HEATER TABLE

Heater Package Model No.	Unit Volts Phase	Htr. Kw & Capacity ϕ 240V (or 480V if applicable) Kw	Btuh	Heater Kw & Capacity ϕ 208 Volts Kw	Btuh	ϕ 208V or 480V as applicable Htr. Amps	Heater Internal Fuses	Circuit B Number Field Ckts.	Minimum Circuit Ampacity	Max. Over-Current (1) Protection	Field (2) Power Wiring	Ground Wire Size (3)
EH3PA-A05	240/208-1	5	17,100	3.75	12,800	20.8		1	26	30	10	10
EH3PA-A08	240/208-1	8	27,300	6	20,500	33.3		1	42	45	6	10
EH3PA-A10	240/208-1	10	34,100	7.5	26,000	41.7		1	53	60	6	10
EH3PA-A15	240/208-1	15	51,200	11.25	38,400	62.5	30/60	1	79	80	3	8
EH3PA-B09	240/208-3	9	30,700	6.75	23,000	21.7		1	28	30	10	10
EH3PA-B15	240/208-3	15	51,200	11.25	38,400	36.2		1	46	50	6	10
EH3PA-C09	460-3	9	30,700	6.75	23,000	10.8		1	15	15	14	14
EH3PA-C15	460-3	15	51,200	11.25	38,400	18.0		1	23	25	10	10
EH5PA-A05	240/208-1	5	17,100	3.75	12,800	20.8		1	26	30	10	10
EH5PA-A10	240/208-1	10	34,100	7.5	26,000	41.7		1	53	60	6	10
EH5PA-A15	240/208-1	15	51,200	11.25	38,400	62.5	30/60	1	79	80	3	8
EH5PA-A20	240/208-1	20	68,200	15	51,200	83.2	60/60	1	104	110	2 (4)	6
EH5PA-B09	240/208-3	9	30,700	6.75	23,000	21.7		1	28	30	10	10
EH5PA-B15	240/208-3	15	51,200	11.25	38,400	36.2		1	46	50	6	10
EH5PA-B18	240/208-3	18	61,400	13.5	46,100	43.4		1	55	60	6	10
EH5PA-C09	460-3	9	30,700	6.75	23,000	10.8		1	15	15	14	14
EH5PA-C15	460-3	15	51,200	11.25	38,400	18.0		1	23	25	10	10
EH5PA-C18	460-3	18	61,400	13.5	46,100	21.7		1	28	30	10	10

(1) Time Delay fuses or "HACR Type" circuit breakers must be used for 60 and smaller sizes. Standard fuses or circuit breakers are suitable for sizes 70 and larger. 480V circuit breakers are not "HACR" type.
(2) Based on wire suitable for 60°C. Other wiring materials must be rated for marked "Minimum Circuit Ampacity" or greater.
(3) Based upon Table 250-95 of N.E.C. 1984. See electrical data for basic heat pump for Ckt.A wiring specification requirements.
(4) For ampacities over 108 amperes use wire suitable for at least 75°C.

IMPORTANT: While this electrical data is presented as a guide, it is important to electrically connect, properly size fuses and conductor wires in accordance with the National Electrical Code and all existing local codes.

OPTIONAL FIELD-INSTALLED HEATER PACKAGES ARE ONLY TO BE USED WITH THE HEAT PUMP MODELS AS INDICATED BELOW

Heater Package Model No.	Volts and PH	PH25	PH314	PH364	PH364-B	PH364-C 460V	PH421	PH421-B	PH421-C 460V	PH484	PH484-B	PH484-C 460V	PH605	PH605-B	PH605-C 460V
EH3PA- A05	240/1	1	1	1	*	*									
EH3PA- A08		1	1	1	*	*									
EH3PA- A10			1	1	*	*									
EH3PA- A15			1	1	*	*									
EH3PA- B09	240/3		*	*	1	*									
EH3PA- B15			*	*	1	*									
EH3PA- C09	480/3		*	*	*	1									
EH3PA- C15			*	*	*	1									
EH5PA- A05	240/1						1	*	*	1	*	*	1	*	*
EH5PA- A10							1	*	*	1	*	*	1	*	*
EH5PA- A15							1	*	*	1	*	*	1	*	*
EH5PA- A20										1	*	*	1	*	*
EH5PA- B09	240/3						*	1	*	*	1	*	*	1	*
EH5PA- B15							*	1	*	*	1	*	*	1	*
EH5PA- B18										*	1	*	*	1	*
EH5PA- C09	480/3						*	*	1	*	*	1	*	*	1
EH5PA- C15							*	*	1	*	*	1	*	*	1
EH5PA- C18										*	*	1	*	*	1

1 - Standard application - Heater volts and phase same as basic unit.
* - Alternate application - Heater volts and phase different from basic unit.

IMPORTANT

The equipment covered in this manual is to be installed by trained, experienced service and installation technicians. Any heat pump is more critical of proper operating charge and an adequate duct system than a straight air conditioning unit. All duct work, supply and return, must be properly sized for the design air flow requirement of the equipment. ACCA is an excellent guide to proper sizing. All duct work or portions thereof not in the conditioned space should be properly insulated in order to both conserve energy and prevent condensation or moisture damage.

SHIPPING DAMAGE

Upon receipt of equipment, the carton should be checked for external signs of shipping damage. If damage is found, the receiving party must contact the last carrier immediately, preferably in writing, requesting inspection by the carrier's agent.

GENERAL

The refrigerant system is completely assembled and charged. All internal wiring is complete.

The unit is designed for use with or without duct work. Flanges are provided for attaching the supply and return ducts.

These instructions explain the recommended method to install the air cooled self-contained unit and the electrical wiring connections to the unit.

These instructions and any instructions packaged with any separate equipment required to make up the entire air conditioning system should be carefully read before beginning the installation. Note particularly "Starting Procedure" and any tags and/or labels attached to the equipment.

While these instructions are intended as a general recommended guide, they do not supersede any national and/or local codes in any way. Authorities having jurisdiction should be consulted before the installation is made.

LOCATION

General - The unit must be located outside, or in a well ventilated area. It must not be in the space being heated or cooled. A sound absorbing material should be considered if the unit is to be installed in such a position or location that might cause transmission of sound or vibration to the living area or adjacent buildings.

Slab Mounting - In areas where winter temperatures DO NOT go below 32°F for periods over twelve hours, the unit may be slab mounted at grade level. When installing unit at grade level, install on a concrete slab at least four inches above finished grade level. Slab should have a slope tolerance away from the building structure of at least 1/4 inch per foot, while being level from side to side. This will prevent ice buildup under the unit during defrost cycles. Place slab in a location where run-off water from higher ground will not collect around unit. See Figure 1.

A minimum of 18 inches should be provided between the coil inlet and any building surfaces. Provide at least four feet between coil outlet and any building wall, fences or other vertical structures. Provide a minimum of three feet clearance on the service access side of the unit. See Figure 2.

Roof Mounting - When a unit is installed in areas where low ambient temperatures or strong winter winds exist, it should be placed so prevailing winter winds are not in direct line with the heat pump coil. If this is not possible, a wind barrier should be constructed. Place barrier 24 inches from the coil inlet side of the unit and in the direction of prevailing winds. Size barrier at least the same height and width as the unit. This may also be necessary on ground level installations. See Figure 3.

Winter Installation Below 32°F - In areas where winter conditions go below 32°F for extended periods, the unit must be elevated above the mounting surface to prevent snowfall or defrost ice accumulation from interfering with the operation of the unit. A minimum of twelve inch elevation is recommended, while greater elevation may be required for areas of high snow accumulation. Poured concrete, steel framework, brick, cement block, etc., can be utilized to construct a suitable raised mounting platform. See Figure 4.

TYPICAL INSTALLATION

1. Roof-Mounted - The unit is mounted on a sturdy base on the roof of the building. Return air to the unit is brought through a single return grille (grilles with built-in filters are best, since they enable easy access for filter changing). Return air ducts are attached to the lower section of the front panel. Supply air is brought from the unit to attic duct work or to a furred down hall. Supply air duct is attached to the top of the front panel. CAUTION: All outdoor duct work must be thoroughly insulated and weatherproofed. All attic duct work must be thoroughly insulated. Two inch thick insulation with suitable vapor barrier is recommended for both outdoor and attic runs. In rooftop installations, as in all installations, the heat pump must be level from side to side. However, the unit should have a pitch along the length to assure complete external drainage of precipitation and of defrost condensate.

2. Crawl Space - Duct work installed in crawl space must be well insulated and provided with a vapor barrier. In addition, the crawl space must be thoroughly ventilated and provided with a good vapor barrier as a ground cover. It is most desirable to install the unit outdoors, rather than inside the crawl space, so that it will be readily accessible for service. In addition, it is necessary to dispose of the condensate from the outdoor coil on the heating cycle, and this is virtually impossible with the unit installed inside the crawl space.

3. Slab Mounted at Ground Level - This type installation is ideal for homes with a slab floor construction, where a roof-mounted unit is not desired. The supply and return duct work can be run through a furred closet space.

4. Thru-the-Wall - This type installation requires a suitable framework to be fabricated capable of withstanding the unit weight. Normally the unit will be installed so as to minimize supply and return duct work.

5. Other Installations - Many other installations are possible with the packaged heat pump. No matter what the installation, always consider the following facts:

   a. Insure that the discharge air is not obstructed in any way so as to cause operation difficulties.

   b. The indoor coil drain pan is equipped with a coupling that must be piped through a condensate drain trap to a suitable drain.

   c. Always mount the unit in such a position that it may be easily reached for servicing and maintenance.

   d. Insure that the unit is clear so that proper air flow over the outdoor coil will be maintained.

RATED CFM AND EXTERNAL STATIC PRESSURE (ESP) WET COIL (COOLING)			
Model	Rated CFM	Rated ESP	Recommended Air Flow Range
PH25	800	.35	720 - 880 CFM
PH314	1125	.30	1000 - 1340 CFM
PH364	1275	.23	1150 - 1400 CFM
PH421	1505	.30	1528 - 1765 CFM
PH484 PH605	1700	.20	1528 - 1765 CFM

If this unit is operated in cooling below a 65° outdoor ambient temperature, the installation of low ambient controls (LAC-1 and 8201-004 relay) to unit is required.

AIR FILTERS

Air filters for the return air side of the system are not provided as part of the basic piece of equipment because of the various types of application for these models, and must be field supplied and installed as part of the final installation.

Prior thought should be given to return air location and placement of the air filter(s). The air filter(s) must be of adequate size and readily accessible to the operator of the equipment. Filters must be adequate in size and properly maintained for proper operation. If this is not done, excessive energy use, poor performance, and multiple service problems will result. IT IS IMPOSSIBLE TO OVERSIZE AIR FILTERS. Generous sizing will result in cleaner air and coils, as well as lower operating costs and extend the time between required changes. The following table shows minimum filter areas and recommended filter sizes. Actual filter sizes can vary with the installation due to single or multiple returns utilizing a filter/grille arrangement or being placed immediately ahead of the indoor coil face in the return air duct.

Model	Minimum Filter Areas	Recommended Size
PH25, PH314, PH364	462 sq.in.(3.21 sq.ft)	15 x 30-5/8 x 1
PH421, PH484, PH605	608 sq.in.(4.62 sq.ft)	(2) 16 x 20 x 1

NOTE: If Roof Hood Accessory is to be used, information on air filters may be found under that heading in this manual. Air filters are supplied as part of that package.

WIRING - MAIN POWER

Refer to the unit rating plate for wire sizing information and maximum fuse size. Each outdoor unit is marked with a "Minimum Circuit Ampacity." This means that the field wiring used must be sized to carry that amount of current. If field installed heaters are added to the basic unit, a second, separate power supply circuit will be required. The heater rating plate located adjacent to the basic unit rating plate will show the appropriate circuit ampacity, fuse size, etc. (Also see "Electrical Data" on page 1) Some models are suitable only for connection with copper wire, while others can be wired with either copper or aluminum wire. Each unit and/or wiring diagram will be marked "Use Copper Conductors Only" or "Use Copper or Aluminum Conductors." These instructions MUST BE adhered to. Refer to the National Electrical Code for complete current carrying capacity data on the various insulation grades of wiring material.

The electrical specifications on page 1 lists fuse and wire sizes (60°F copper) for all models, including the most commonly used heater sizes.

The unit rating plate lists a "Maximum Time Delay Fuse" or "HACR" Type Circuit Breaker that is to be used with the equipment. The correct size must be used for proper circuit protection and also to assure that there will be no nuisance tripping due to the momentary high starting current of the compressor.

WIRING - 24V CONTROL CIRCUIT

Ten (10) wires should be run from thermostat subbase to the 24V terminal board in the unit. A nine conductor, 18 gauge copper, color-coded thermostat cable is recommended. The connection points are shown on most of the wiring diagrams and are also shown below.

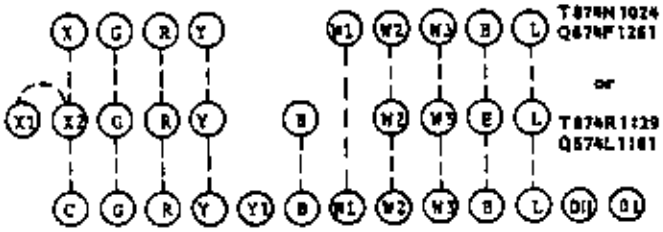

Unit 24V terminal Board

IMPORTANT NOTE: Only the thermostat and subbase combinations as shown above will work with this equipment. The stat and subbase MUST be matched, and correct operation can be assured only by proper selection and application of these parts.

COMPRESSOR CUT-OFF THERMOSTATS OUTDOOR THERMOSTATS

Heat pump compressor operation at outdoor temperatures below 0°F are neither desirable nor advantageous in terms of efficiency. Since most equipment at time of manufacture is not designated for any specific destination of the country, and most of the equipment is installed in areas not approaching the lower outdoor temperature range, the compressor cut-offs are not factory installed.

Outdoor thermostats are available to hold off various banks of electric heat until needed as determined by outdoor temperature. The set point of either type of thermostat is variable with geographic region and sizing of the heating equipment to the structure. Utilization of the Heating Application Data and the heat loss calculation of the building are useful in determining the correct set points.

COMPRESSOR CUT-OFF AND OUTDOOR THERMOSTAT WIRING

See specific wiring information for the different models, heater Kw's, and voltages on page 5.

WALL THERMOSTAT AND SUBBASE COMBINATIONS			
Group	Thermostat	Subbase	Predominant Feature
A	8403-017 (T874R1129)	8484-809 (Q674L1181)	Heat or Cool No Auto ①
B	8403-018 (T874N1024)	8484-810 (Q674F1261)	Automatic Heat-Cool Changeover Position ②

① No automatic changeover position--must manually place in heat or cool. Reversing valve remains energized at all times system switch is in heat position (except during defrost cycle). No pressure equalization noise when thermostat is satisfied on either heating or cooling.

② Allows thermostat to control both heating and cooling operation when set in "AUTO" position. Reversing valve de-energizes at end of each "ON" heating cycle.

IMPORTANT NOTE: Both thermostat and subbase combinations shown above incorporate the following features: Man-Auto fan switch, Off-Heat-Cool-Em. Heat Switch, and two (2) indicator lamps--one for emergency heat and one for compressor malfunction.

THERMOSTAT INDICATOR LAMPS

The red lamp marked "EM.HT." comes on and stays on whenever the system switch is placed in the Em. Ht. position. The green lamp marked "check" will come on if there is any problem that prevents the compressor from running when it is supposed to be.

EMERGENCY HEAT POSITION

The operator of the equipment must manually place the system switch in this position. This is done when there is a known problem with the outdoor section, or when the green "check" lamp comes on indicating a problem.

COMPRESSOR MALFUNCTION RELAY (Single Phase Models Only)

Actuation of the green "check" lamp is accomplished by a voltage type relay which is factory installed. Any condition such as loss of charge, defective capacitor, defective contactor, etc., that will prevent compressor from operating will cause green lamp to activate. This is a signal to the operator of the equipment to place system in emergency heat position.

PRESSURE SERVICE PORTS

High and low pressure service ports are installed on all units so that the system operating pressures can be observed. Pressure curves can be found later in the manual covering all models on both cooling and heating cycles. It is imperative to match the correct pressure curve to the unit by model number.

SEQUENCE OF OPERATION

Cooling - Circuit R-Y makes at thermostat pulling in compressor contactor starting the compressor and outdoor motor. The G (indoor motor) circuit is automatically completed on any call for cooling operation, or can be energized by manual fan switch on subbase for constant air circulation.

Heating - A 24V solenoid coil on reversing valve controls heating cycle operation. Two thermostat options, one allowing "Auto" changeover from cycle to cycle and the other constantly energizing solenoid coil during heating season and thus eliminating pressure equalization noise except during defrost, are to be used. On "Auto" option, a circuit is completed from R-W1 and R-Y on each heating "on" cycle, energizing reversing valve solenoid and pulling in compressor contactor starting compressor and outdoor motor. R-G also make starting indoor blower motor. Heat pump heating cycle now in operation. The second option has no "Auto" changeover position, but instead energizes the reversing valve solenoid constantly whenever the system switch on subbase is placed in "Heat" position, the "B" terminal being constantly energized from R. A thermostat demand for heat completes R-Y circuit, pulling in compressor contactor starting compressor and outdoor motor. R-G also make starting indoor blower motor.

DEFROST CYCLE

The defrost cycle is controlled by time and temperature. The 24 volt timer motor runs all the time the compressor is in operation. When the outdoor temperature is in the lower 40°F temperature range or colder, the outdoor coil temperature is 32°F or below. This temperature is sensed by the defrost thermostat mounted near the bottom of the outdoor coil on a return bend. The defrost thermostat closes at approximately 32°F. Every 60 (or 30) minutes that the compressor is running, contacts 3-5 close for 7 minutes, with contacts 3-9 closed for the first 90 seconds of that 7 minutes. If the defrost thermostat is closed, the defrost relay energizes and places the system in defrost mode. An interlocking circuit is created with timer contacts 3-5 and defrost relay contacts 7-9 in series.

During the defrost mode, the refrigerant cycle switches back to the cooling cycle, the outdoor motor stops, electric heaters are energized, and hot gas passing through the outdoor coil melts any accumulated frost. When the temperature rises to approximately 57°F, the defrost thermostat opens, de-energizing the defrost relay and returning the system to heating operation.

If some abnormal or temporary condition such as a high wind causes the heat pump to have a prolonged defrost cycle, contacts 3-5 of the defrost timer will open after 7 minutes and restore the system to heating operations automatically.

There are two time settings on the defrost timer—30 minutes and 60 minutes. Most models are shipped wired on the 60 minute setting for greatest operating economy. If special circumstances require a change to the shorter time, remove wire connected to terminal 5/60 and reconnect to terminal 5/30.

There is a manual advance knob located on the timer. This can be used to advance timer to contact closure point if it is desired to check out defrost cycle operation, without waiting for time to elapse.

IMPORTANT INSTALLER NOTES

For improved start-up performance wash the indoor coil with a dishwasher detergent.

DEFROST TIMER WIRING

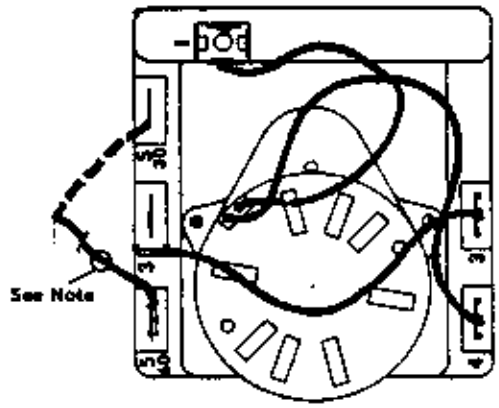

NOTE: All models are connected to 5/60 terminal (60 minute). Any model can be changed from 60 minutes to 30 minutes by unplugging from 5/60 terminal and reconnecting to 5/30 terminal.

SERVICE HINTS

1. Caution homeowner to maintain clean air filters at all times. Also, not to needlessly close off supply and return air registers. This reduces air flow through the system, which shortens equipment service life as well as increasing operating costs.
2. Switching to heating cycle at 75°F or higher outside temperature may cause a nuisance trip of the manual reset high pressure switch.
3. The heat pump wall thermostats perform multiple functions. Be sure that all function switches are correctly set for the desired operating mode before trying to diagnose any reported service problems.
4. Check all power fuses or circuit breakers to be sure that they are the correct rating.
5. Periodic cleaning of the outdoor coil to permit full and unrestricted airflow circulation is essential.

REFRIGERANT CHARGE

The correct system R-22 charge is shown on the unit rating plate. Optimum unit performance will occur with a refrigerant charge resulting in a suction line temperature (6" from compressor) as shown in the following table:

Model	Rated Airflow	95°F O.D. Temp.	82°F O.D. Temp.
PH25	800	52 - 54	64 - 66
PH314	1075	58 - 60	66 - 68
PH364	1275	55 - 57	60 - 62
PH421	1300	60 - 62	67 - 69
PH484	1700	51 - 53	60 - 62
PH605	1700	59 - 61	64 - 66

The above suction line temperatures are based upon 80°F dry bulb/67°F wet bulb (50% R.H.) temperature and rated airflow across the evaporator during cooling cycle.

CRANKCASE HEATERS

All units are provided with some form of compressor crankcase heat. Some single phase units utilize the compressor motor start winding in series with a portion of the run capacitor to generate heat within the compressor shell to prevent liquid refrigerant migration.

Some single and three phase models have an insertion well-type heater located in the lower section of the compressor housing. This is a self-regulating type heater that draws only enough power to maintain the compressor at a safe temperature.

Some form of crankcase heat is essential to prevent liquid refrigerant from migrating to the compressor, causing oil pump out on compressor start-up and possible valve failure due to compressing a liquid.

Refer to unit wiring diagram to find exact type of crankcase heater used.

The following decal is affixed to all outdoor units detailing start-up procedure. This is very important. Please read carefully.

IMPORTANT

THESE PROCEDURES MUST BE FOLLOWED AT INITIAL START-UP AND AT ANY TIME POWER HAS BEEN REMOVED FOR 12 HOURS OR LONGER.

TO PREVENT COMPRESSOR DAMAGE WHICH MAY RESULT FROM THE PRESENCE OF LIQUID REFRIGERANT IN THE COMPRESSOR CRANKCASE

1. MAKE CERTAIN THE ROOM THERMOSTAT IS IN THE "OFF" POSITION (THE COMPRESSOR IS NOT TO OPERATE).
2. APPLY POWER BY CLOSING THE SYSTEM DISCONNECT SWITCH. THIS ENERGIZES THE COMPRESSOR HEATER WHICH EVAPORATES THE LIQUID REFRIGERANT IN THE CRANKCASE.
3. ALLOW 4 HOURS OR 60 MINUTES PER POUND OF REFRIGERANT IN THE SYSTEM AS NOTED ON THE UNIT RATING PLATE, WHICHEVER IS GREATER.
4. AFTER PROPERLY ELAPSED TIME THE THERMOSTAT MAY BE SET TO OPERATE THE COMPRESSOR.
5. EXCEPT AS REQUIRED FOR SAFETY WHILE SERVICING — DO NOT OPEN SYSTEM DISCONNECT SWITCH.

7901-061

COMPRESSOR CUT-OFF WIRING

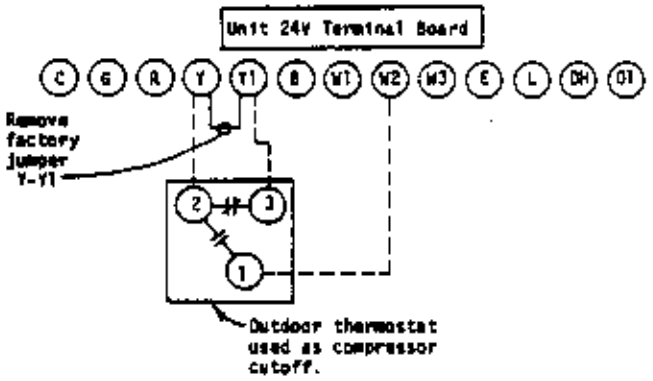

MODEL	KW	VOLTS	PHASE
PH25	0, 5, 8	230	1
PH314	0, 5, 8, 10	230	1
PH364	0, 5, 8, 10	230	1
PH364-B,C	0, 6, 9, 12, 15	230, 460	3
PH421	0, 5, 10	230	1
PH421-B,C	0, 9, 12, 15	230, 460	3
PH484	0, 5, 10	230	1
PH484-B,C	0, 9, 12, 15	230, 460	3
PH605	0, 5, 10	230	1
PH605-B,C	0, 9, 12, 15	230, 460	3

COMPRESSOR CUT-OFF & OUTDOOR THERMOSTAT WIRING

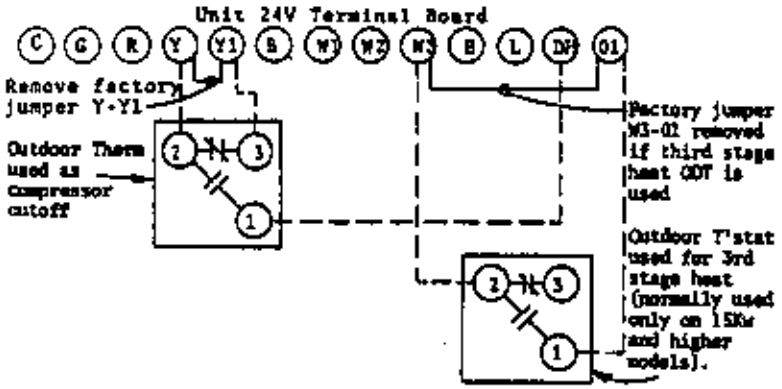

OPTIONAL ELECTRIC HEATERS

These packaged heat pumps are manufactured without supplementary electric heaters. Supplementary heaters EH3PA series (to fit PH25, PH314 & PH364) and EH5PA series (to fit PH421, PH484, and PH605) are available for simple, fast, field installation.

A separate field power circuit is required for the supplementary heaters.

Refer to the electrical data shown on page 1 for proper application information on all available heater combinations and what units they can be used with. It also shows the applicable circuit ampacities, fuse size and wire size for each heater combination.

Refer to the installation instructions packed with the heater for details on how to insert it into the basic unit.

MODEL	KW	VOLTS	PHASE
PH314	15	230	1
PH364	15	230	1
PH421	15, 20	230	1
PH484	15, 20	230	1
PH484-B,C	18	230, 460	3
PH605	15, 20	230	1
PH605-B,C	18	230, 460	3

Figure 2

ROOFTOP APPLICATION

(May also be required for ground level installations)

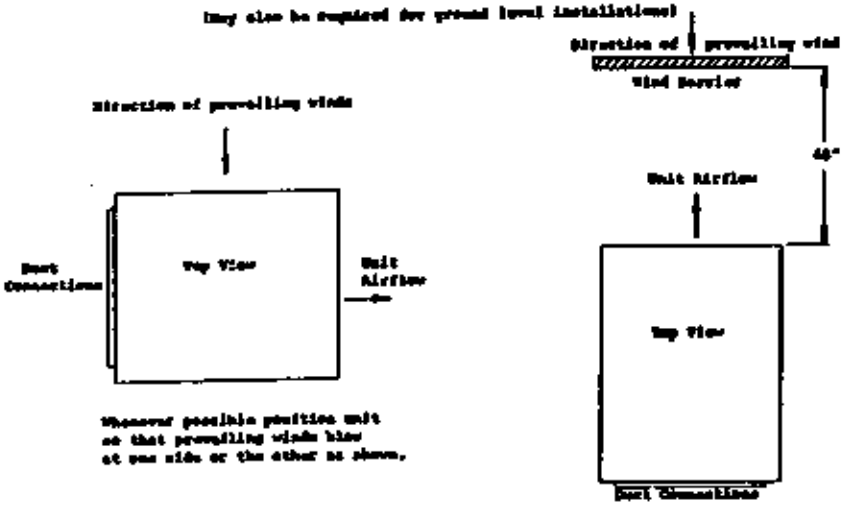

Figure 3

SLAB MOUNTING AT GROUND LEVEL

(Above 15°F Outside Temperature)

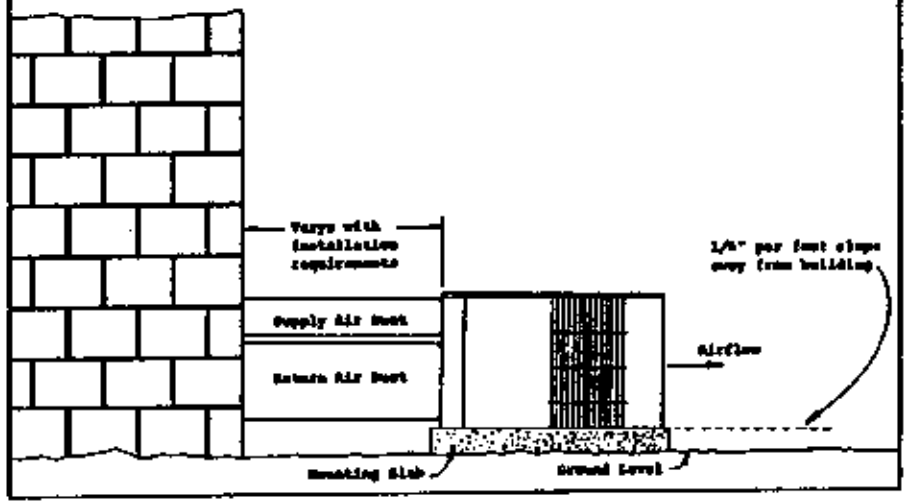

Figure 4

ELEVATED MOUNTING PLATFORMS

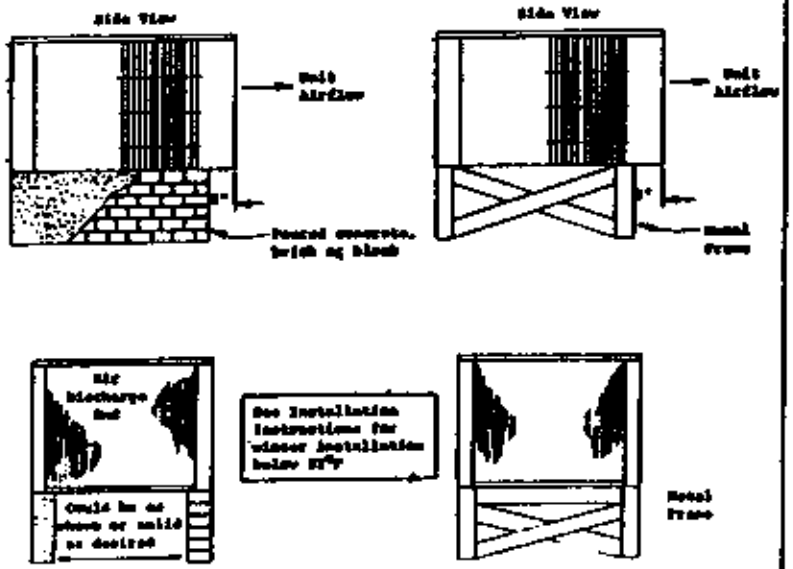

Figure 5

AIRFLOW AND SERVICE ACCESS CLEARANCES

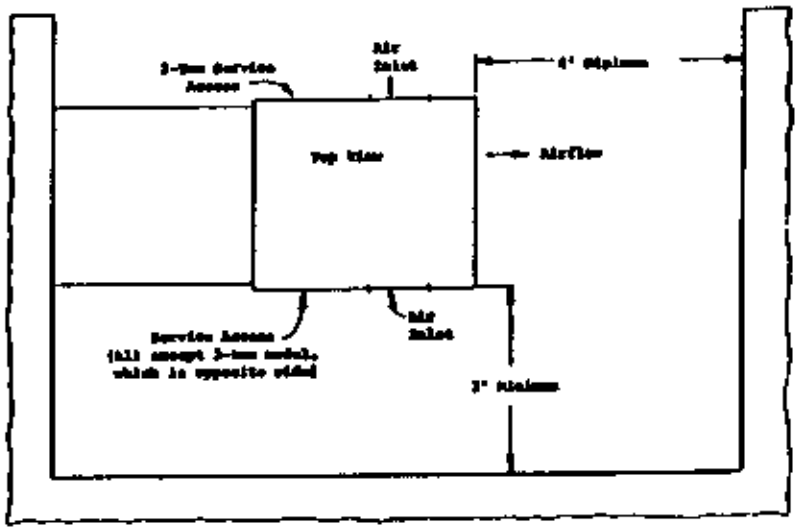

PRE-FABRICATED ROOF CURB SPECIFICATIONS

HEAVY GAUGE GALVANIZED WITH WOOD NAILING STRIP, WELDED/LEAKPROOF ONE PIECE CONSTRUCTION - READY TO INSTALL

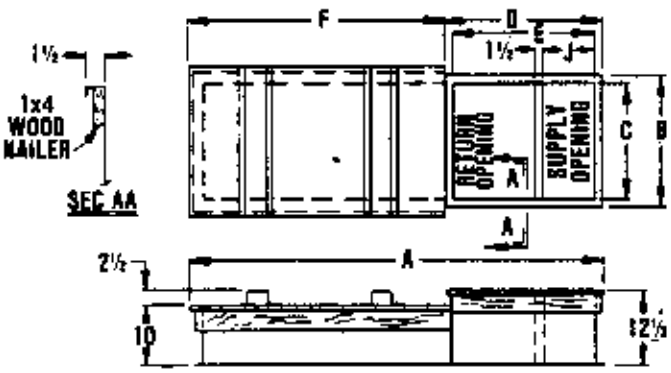

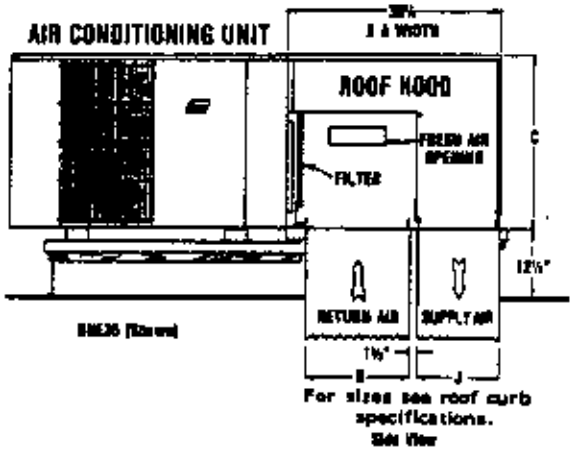

CURB AND ROOF HOOD DETAILS

	A	B	C*	D	E	F	J*	H*	Roof Hood Model	Heat Pump and Air Conditioning Units
P36 Curb	50-3/8	40-1/4	37-1/4	38-3/8	35-3/8	42	14-3/4	19-1/8	RHE36	PH25, P25A, P31A, PH31, P36A, PH36
P60 Curb	62-3/8	44-1/8	41-1/8	38-3/8	35-3/8	44	16-3/4	19-1/8	RHE60	PH42, P48A5, PH48, P60A5, PH60S

*Duct Sizing Information

Return Air Dimension "C" is length
Dimension "H" is width

Supply Air Dimension "C" is length
Dimension "J" is width

FIELD FABRICATED CURBING

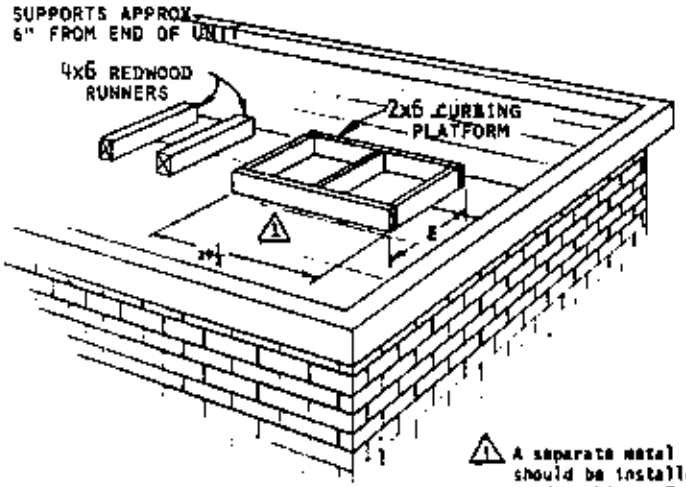

⚠ A separate metal flashing should be installed around wood curbing. Caulk and seal all joints and weather-proof.

ROOF HOOD MODEL	UNIT MODEL	E
RHE36	P25A PH25 P31A PH31 P36A PH36	41
RHE60	PH42 P48A PH48 P60A PH60	44-7/8

ing curves are based upon 80DB, 67WB Temp. and d
CFM (airflow) across the evaporator coil and should be used
for reference purposes only. Specific Information can be found
under section titled "Refrigerant Charge" elsewhere in manual.
If there is any doubt as to correct operating charge being in the
system, the charge should be removed, system evacuated, and
recharged according to serial plate instructions. Heating curves

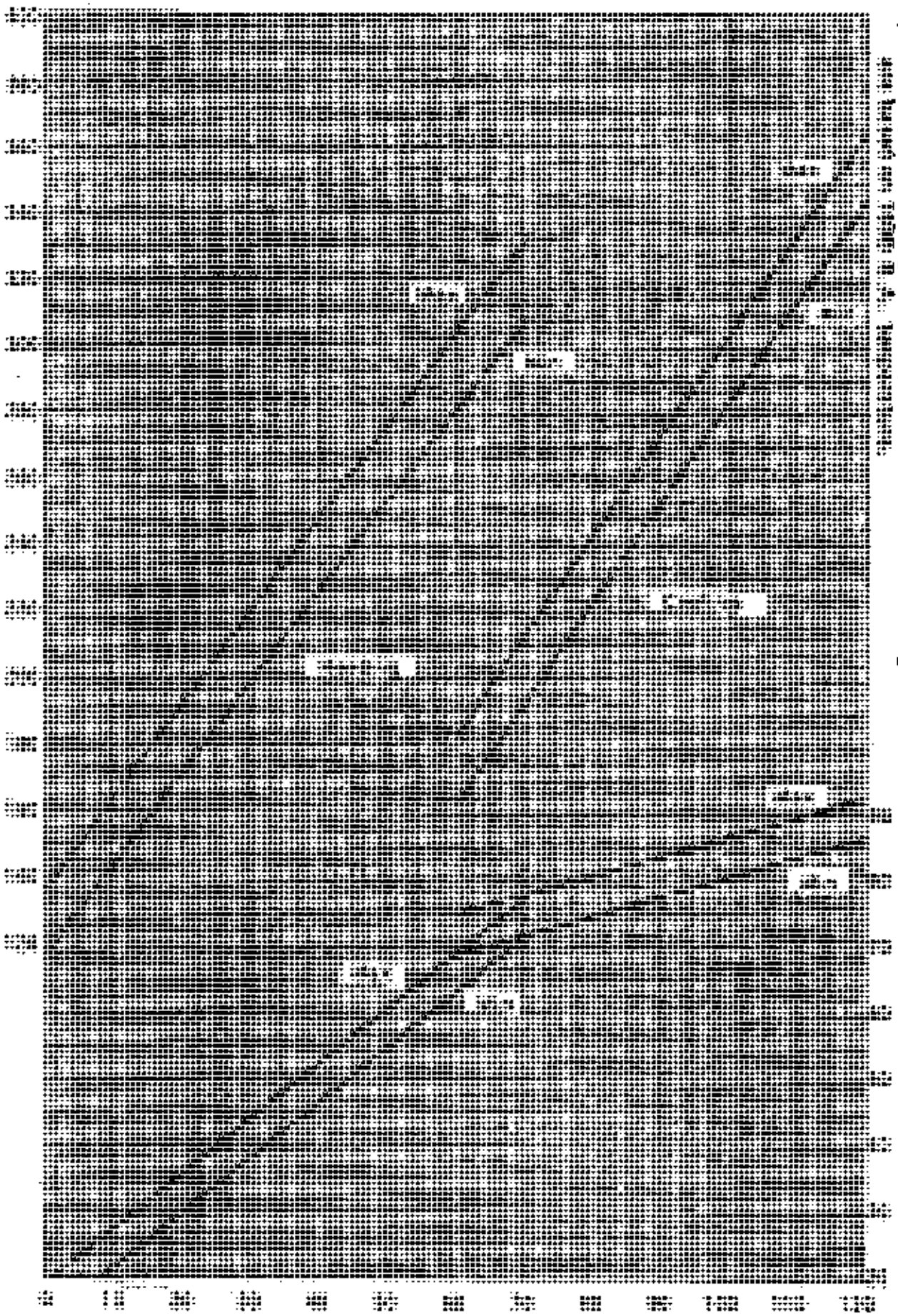

PACKAGED HEAT PUMP MODEL PH314

3/87

Cooling curves are based upon 80DB, 67WB Temp. and rated CFM (airflow) across the evaporator coil and should be used for reference purposes only. Specific information can be found under section titled "Refrigerant Charge" elsewhere in manual. If there is any doubt as to correct operating charge being in the [illegible]

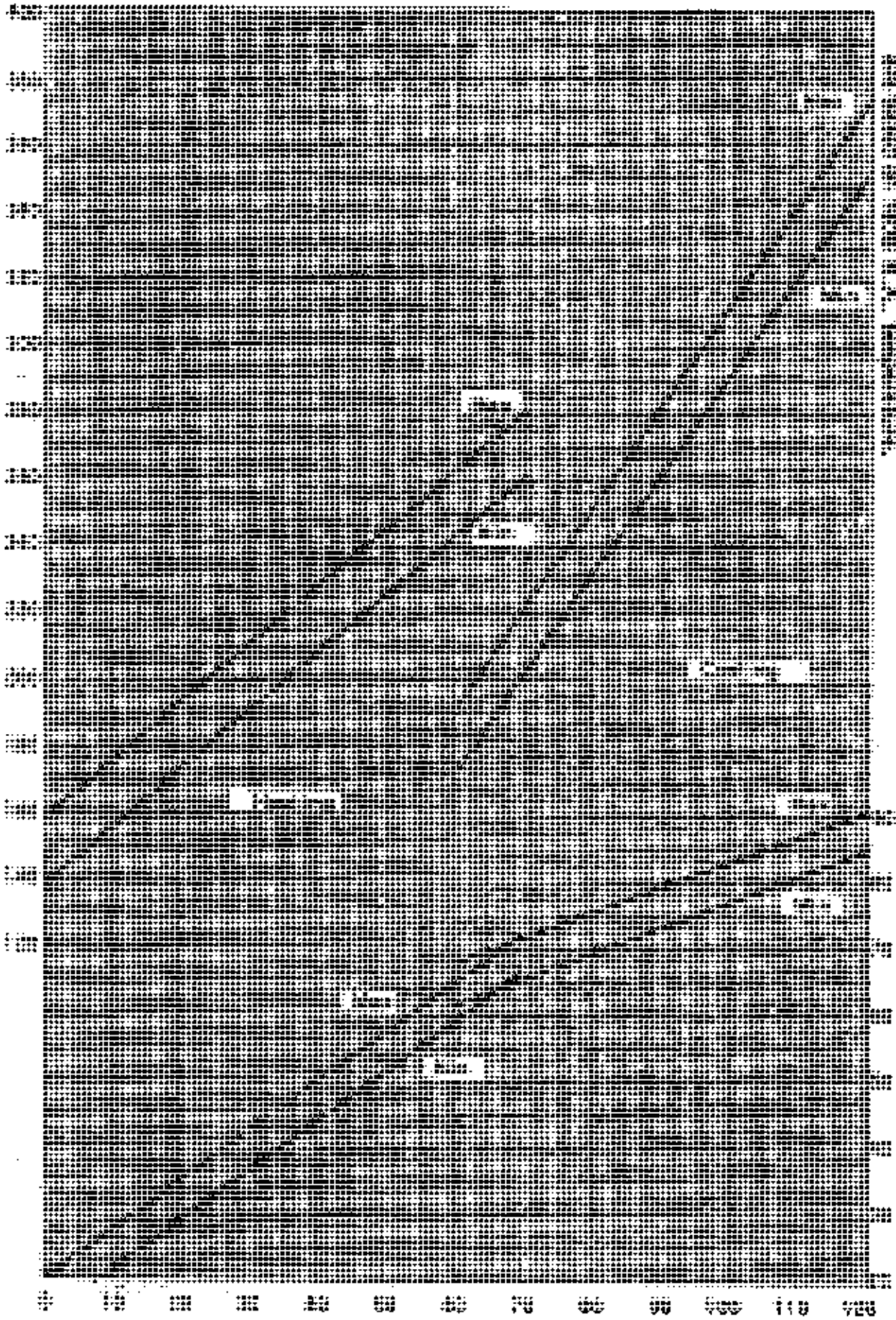

PACKAGED HEAT PUMP MODEL PH364 3/87

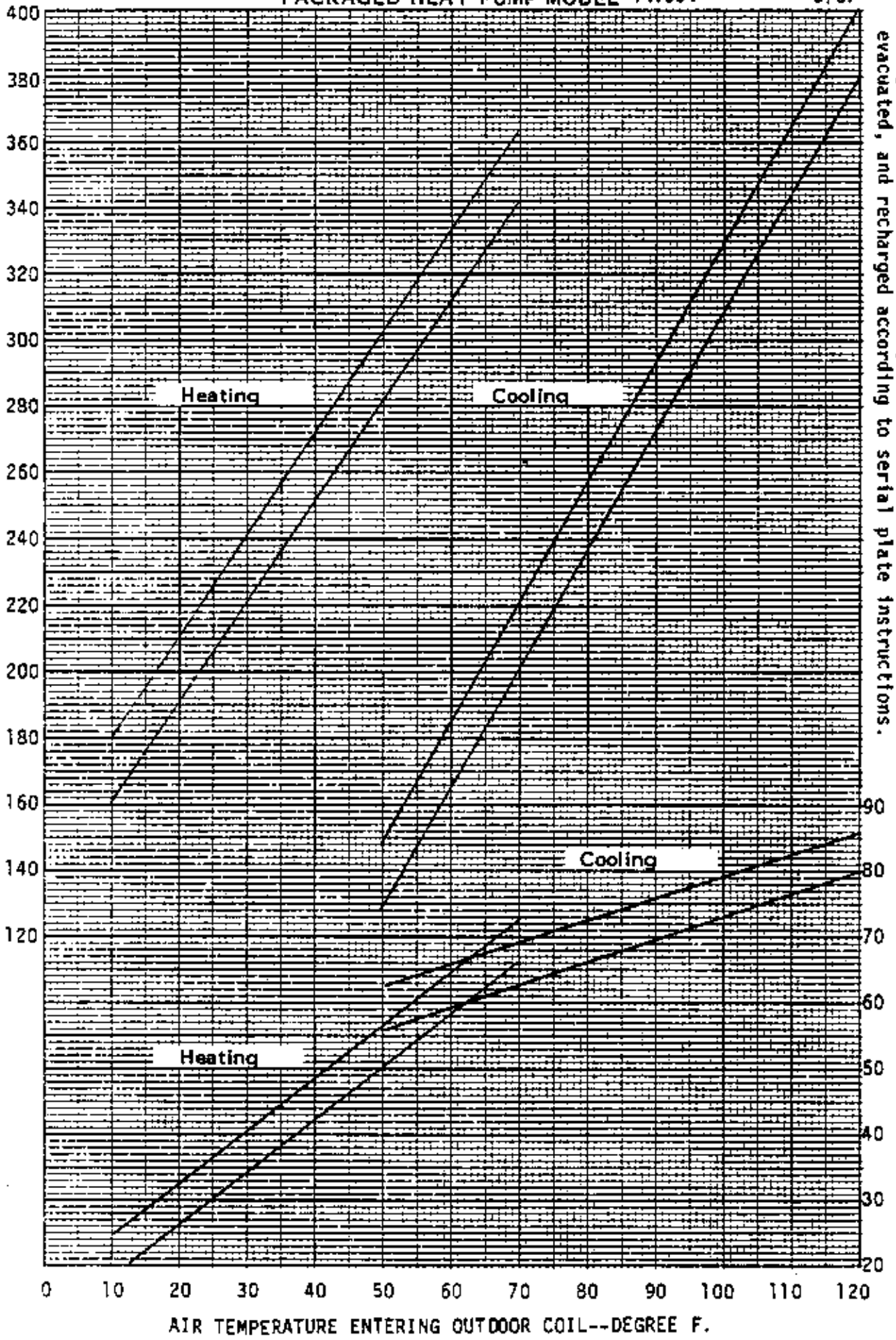

These curves are based upon 80°DB, 67°WB R.A. Temp. and CFM (airflow) across the evaporator coil and should be used for reference purposes only. Special information can be found under section titled "Refrigerant Charge" elsewhere in manual. If there is any doubt as to correct operating charge being in the system, the charge should be removed, system evacuated, and recharged according to serial plate instructions.

Cooling curves are based upon 80DB, 67WB Temp. and rated CFM (airflow) across the evaporator coil and should be used for reference purposes only. Specific information can be found under section titled "Refrigerant Charge" elsewhere in manual.

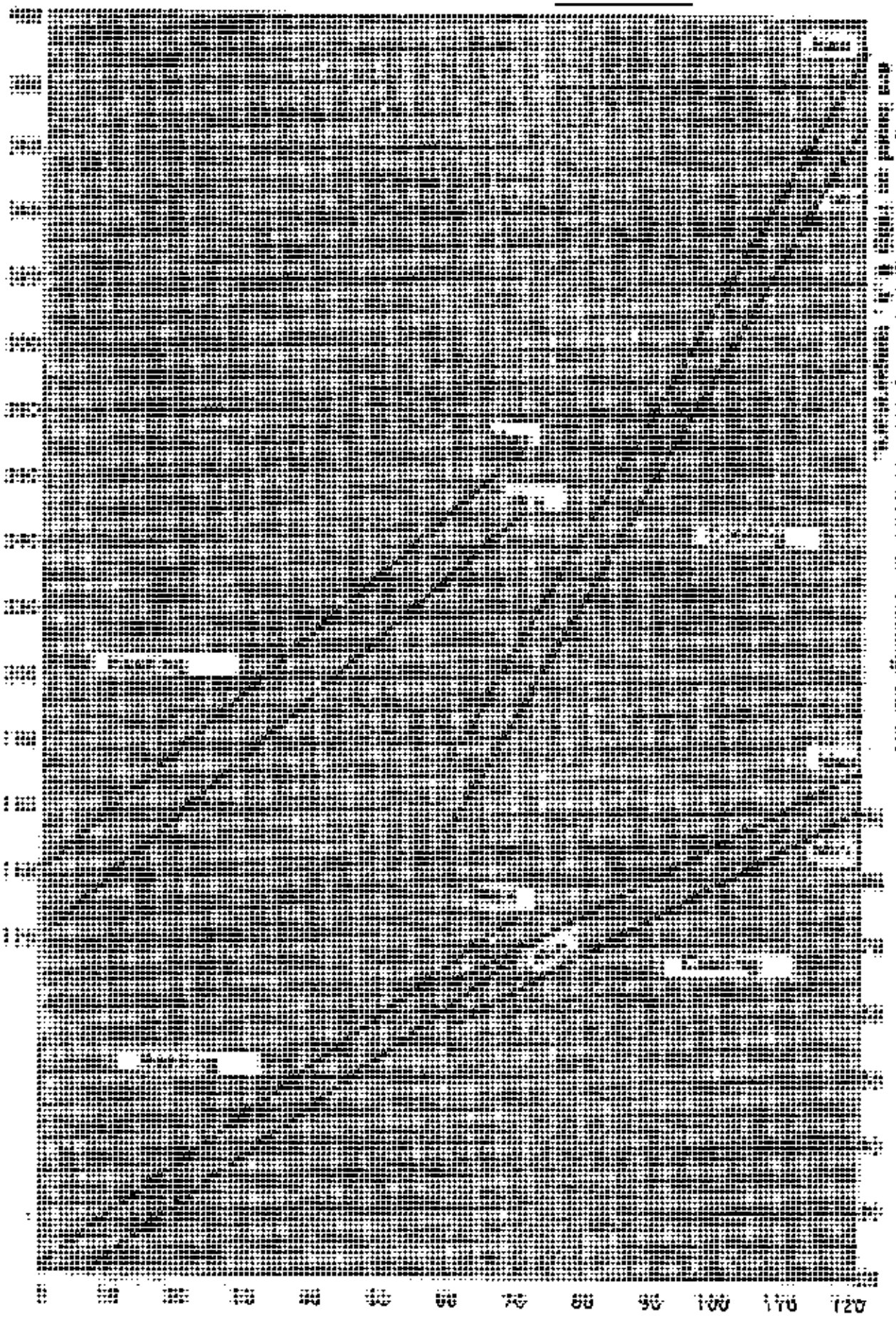

These es are based upon 80°DB, 67°WB R.A. Temp, and R. CFM (air flow) across the evaporator coil and should be used for reference purposes only. Special information can be found under section titled "Refrigerant Charge" elsewhere in manual. If there is any doubt as to correct operating charge being in the system, the charge should be removed, system evacuated, and recharged according to serial plate instructions.

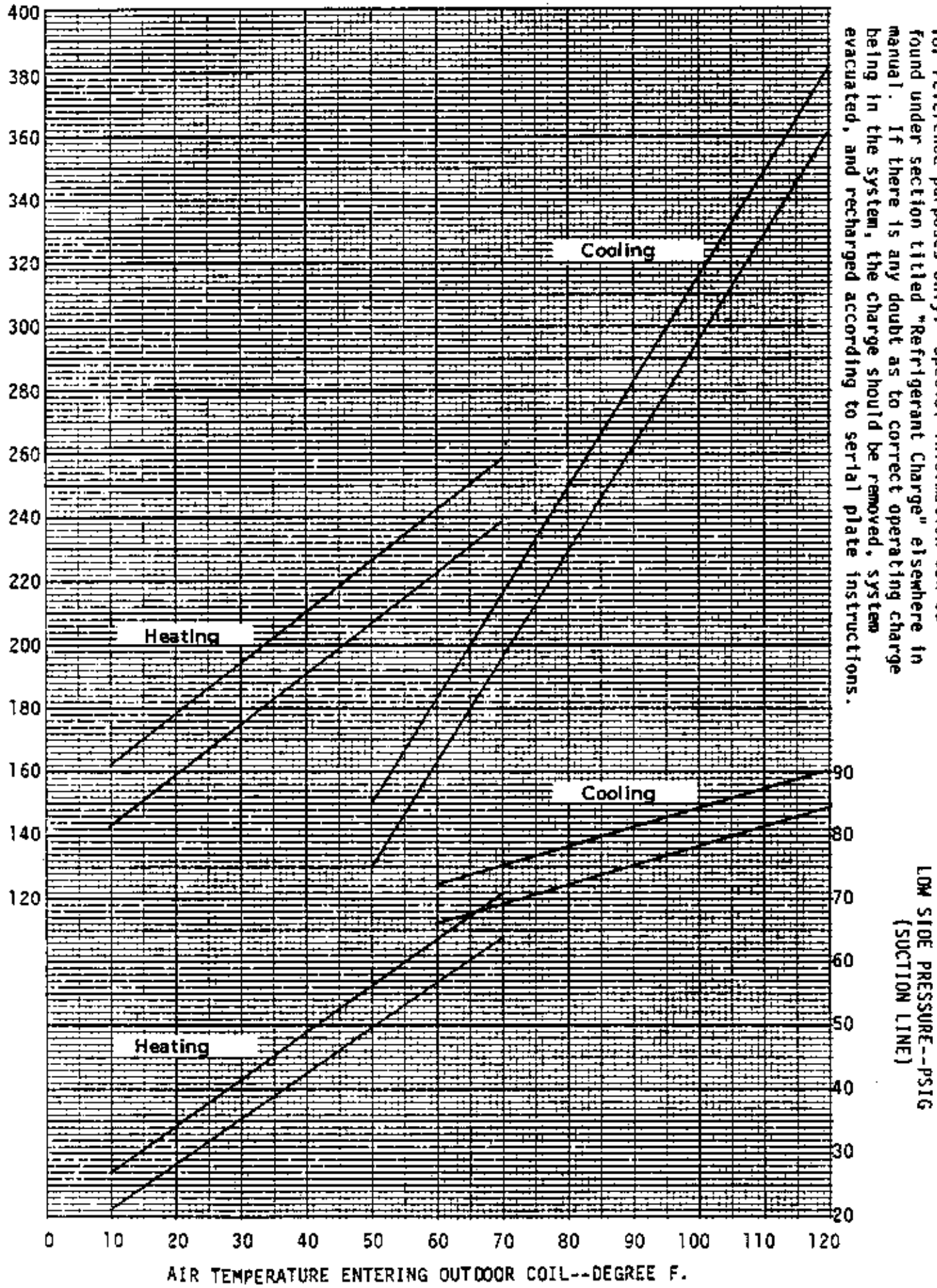

PACKAGED HEAT PUMP MODEL PH605

3/87

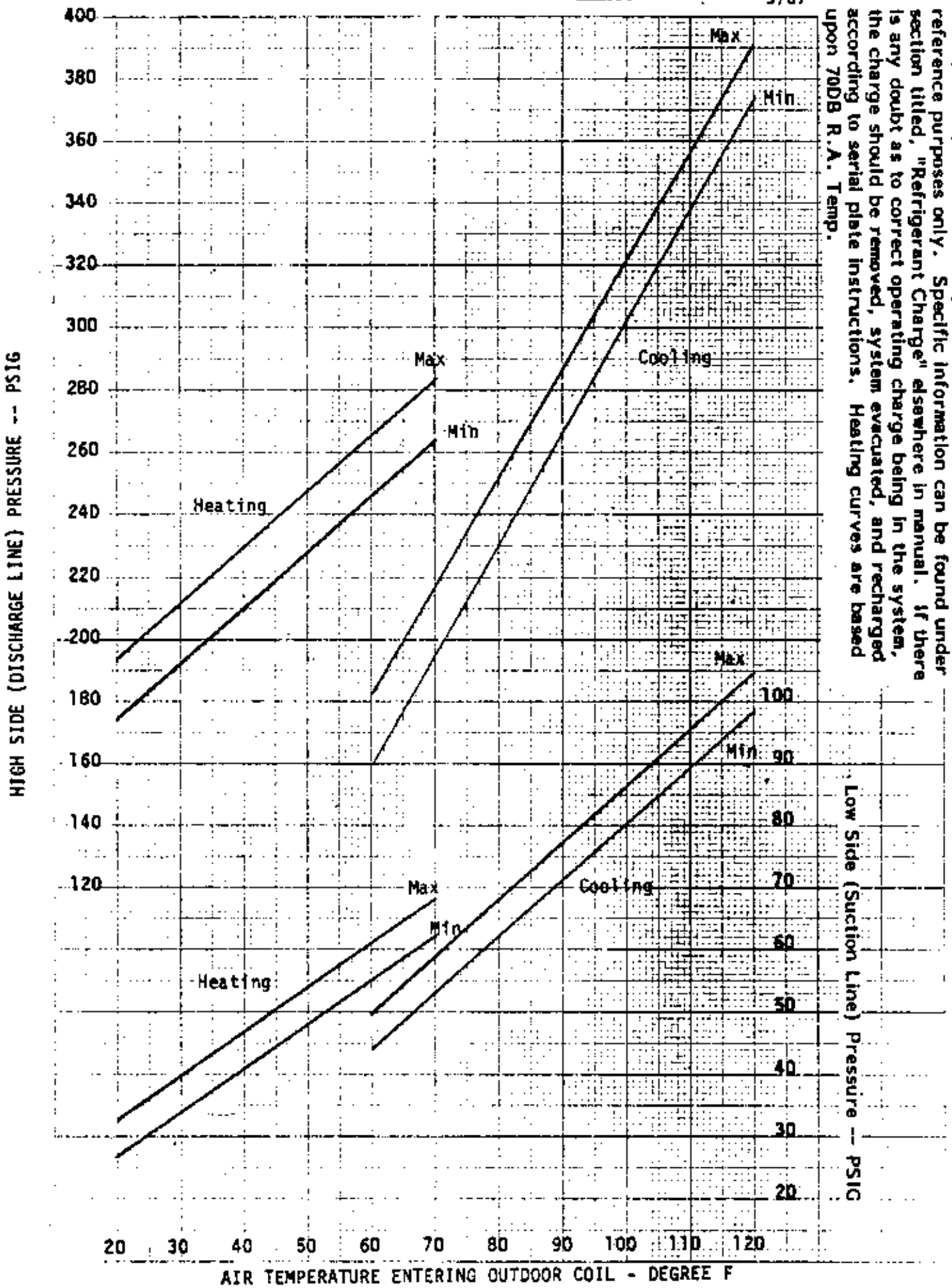

Cooling curves are based upon 80DB, 67WB R.A. Temp. and Rated CFM (airflow) across the evaporator coil and should be used for reference purposes only. Specific information can be found under section titled, "Refrigerant Charge" elsewhere in manual. If there is any doubt as to correct operating charge being in the system, the charge should be removed, system evacuated, and recharged according to serial plate instructions. Heating curves are based upon 70DB R.A. Temp.

PARTS LIST

SINGLE PACKAGE HEAT PUMPS

3/87

PART NO.	DESCRIPTION	PH25	PH314	PH364	PH364-B	PH364-C 460V
5202-003	Accumulator	x	x			
5202-004	Accumulator			x	x	x
*	Blower Housing 10-8	x	x	x	x	x
5152-013	Blower Wheel DD10-8A		x	x	x	x
5152-008	Blower Wheel DD10-4A	x				
8552-002	Capacitor - Fan & Blower 5/370	(2)	(2)	(2)	(2)	(2)
8552-032	Capacitor - Comp. 35/370V	x				
8552-035	Capacitor - Comp. 40/370V		x			
8552-028	Capacitor - Comp. 35/440V			x		
5811-037	Capillary Tube - Heat	(2)				
5811-009	Capillary Tube - Cool	(2)				
5811-034	Capillary Tube - Cool			(2)	(2)	(2)
5811-021	Capillary Tube - Heat			x	x	x
5811-014	Capillary Tube - Heat & Cool		(4)			
5651-036	Check Valve	x	x	x	x	x
5051-003	Condenser Coil		x	x	x	x
5051-042	Condenser Coil	x				
8000-090	Compressor - H22B233ABCA	x				
8000-092	Compressor - H23A303ABCA		x			
8000-058	Compressor - CRJ3-0300-PFV			x		
8000-059	Compressor - CRJ3-0300-TF5				x	
8000-060	Compressor - CRJ3-0300-TFD					x
8401-007	Contactor - 1P25A	x	x	x		
8401-002	Contactor - 3P25A				x	x
8605-010	Crankcase Heater		x			
8408-016	Defrost Thermostat	x	x	x	x	x
5060-037	Evaporator Coil	x				
5060-023	Evaporator Coil		x	x	x	x
5151-034	Fan Blade BT2026-2	x				
5151-004	Fan Blade TP2026 cw		x	x	x	x
8105-027	Motor - Blower 1/3 ccw	x				
8105-024	Motor - Blower 1/3 ccw		x	x	x	
8105-016	Motor - Blower 1/3 ccw					x
8103-016	Motor - Fan	x				
8103-009	Motor - Fan 1/5		x	x	x	
8103-014	Motor - Fan 1/5 cw					x
7051-001	Condenser Grille	x	x	x	x	x
7051-015	Wire Grille - Inlet	(2)	(2)	(2)	(2)	(2)
8406-010	High Pressure Switch	x	x	x	x	x
8200-003	Motor Mount - Blower	x	x	x	x	x
8200-001	Motor Mount - Fan	x	x	x	x	x
5451-011	Motor Mounting Parts	x	x	x	x	x

*Please order by model number.

PARTS LIST

SINGLE PACKAGE HEAT PUMPS

3/87

PART NO.	DESCRIPTION	PH25	PH314	PH364	PH364-B	PH364-C 460V
8201-008	Relay - Blower	x	x	x	x	
8201-032	Relay - Blower					(2)
8201-024	Relay - Compressor Fault	x	x	x		
8201-047	Relay - Defrost	x	x	x	x	x
8201-013	Relay - Emergency Heat	x	x	x	x	x
5650-005	Reversing Valve	x	x			
5650-013	Reversing Valve			x	x	x
5650-008	Solenoid Coil	x	x	x	x	x
5210-004	Strainer	(2)	(2)	x	x	x
5210-002	Strainer			x	x	x
8607-015	Phenolic Insulator					x
8607-010	Terminal Board 24V	x	x	x	x	x
8607-013	Terminal Block 230V	x	x	x		
8607-014	Terminal Block 230V				x	x
8612-012	Timer	x	x	x	x	x
8407-025	Transformer 55VA	x	x	x	x	
8407-037	Transformer - Stepdown					x
4065-110	Wiring Diagram			x		
4065-111	Wiring Diagram		x			
4065-114	Wiring Diagram	x				
4065-210	Wiring Diagram				x	
4065-310	Wiring Diagram					x

Minimum net billing $15.00. Supersedes all previous lists.
Subject to change without notice.

PARTS LIST

SINGLE PACKAGE HEAT PUMPS

3/87

Part No.	Description	PH421	PH421-B	PH484	PH484-B	PH605	PH605-B	PH421-C 460V	PH484-C 460V	PH605-C 460V
5202-005	Accumulator	x	x	x	x			x	x	
5202-008	Accumulator					x	x			x
*	Blower Housing	x	x	x	x	x	x	x	x	x
5152-045	Blower Wheel 10-9	x	x					x		
5152-015	Blower Wheel DD10-10A			x	x	x	x		x	x
8552-030	Capacitor - Comp. 40/440V	x		x						
8552-005	Capacitor - Blower 10/370V	x	x	x	x	x	x	x	x	x
8552-026	Capacitor - Fan 15/370V	x	x	x	x			x	x	
8552-004	Capacitor - Fan 7½/370V					x	x			x
8552-043	Capacitor - Comp. 45/370V					(2)				
5811-016	Capillary Tube - Cool	(2)	(2)					(2)		
5811-020	Capillary Tube - Cool & Heat	(2)	(2)	(2)	(2)			(2)	(2)	
5811-027	Capillary Tube - Heat			(2)	(2)				(2)	
5811-027	Capillary Tube - Cool					(2)	(2)			(2)
5811-032	Capillary Tube - Heat					(2)	(2)			(2)
5651-036	Check Valve	x	x	x	x	x	x	x	x	x
5051-029	Condenser Coil	x	x	x	x	x	x	x	x	x
8000-063	Compressor CRK3-0325-PFV-270	x								
8000-064	Compressor CRK3-0325-TF5-270		x							
8000-065	Compressor CRK3-0325-TFD-270							x		
8000-081	Compressor AV168ET-005-A4			x						
8000-082	Compressor AV169RT-012-A4				x					
8000-083	Compressor AV169TT-013-A4								x	
8000-074	Compressor AG134ET-002-A4					x				
8000-075	Compressor AG134RT-002-A4						x			
8000-049	Compressor AG133UT-003-A4									x
8401-007	Contactor R8242A1008	x								
8401-002	Contactor 30D0-30		x		x			x	x	x
8401-003	Contactor R8243A1007			x						
8401-016	Contactor R8243A1189					x				
8401-011	Contactor 30E0-30						x			
8408-016	Defrost Thermostat	x	x	x	x	x	x	x	x	x
5060-025	Evaporator Coil	x	x	x	x	x	x	x	x	x
5151-029	Fan Blade T10H08-2436 ccw	x	x	x	x			x	x	
5151-030	Fan Blade T10H08-2428 ccw					x	x			x
7051-005	Condenser Grille	x	x	x	x	x	x	x	x	x
7051-007	Wire Grille - Inlet	(2)	(2)	(2)	(2)	(2)	(2)	(2)	(2)	(2)

*Please order by model number.

PARTS LIST

SINGLE PACKAGE HEAT PUMPS

3/87

Part No.	Description	PH421	PH421-B	PH484	PH484-B	PH605	PH605-B	PH421-C 460V	PH484-C 460V	PH605-C 460V
8406-010	High Pressure Switch	x	x	x	x	x	x	x	x	x
8106-015	Motor - Blower 1/2 hp	x	x	x	x	x	x	x	x	x
8105-021	Motor - Fan 1/3 hp	x	x	x	x			x	x	
8106-016	Motor - Fan 1/2 hp					x	x			x
8200-003	Motor Mount - Blower	x	x					x		
8200-004	Motor Mount - Fan	x	x	x	x	x	x	x	x	x
5451-011	Motor Mounting Parts	x	x	x	x	x	x	x	x	x
8201-008	Relay - Blower	x	x	x	x	x	x	x	x	x
8201-024	Relay - Compressor Fault	x		x		x				
8201-047	Relay - Defrost	x	x	x	x	x	x	x	x	x
8201-013	Relay - Emergency Heat	x	x	x	x	x	x	x	x	x
5650-006	Reversing Valve	x	x	x	x			x	x	
5650-010	Reversing Valve					x	x			x
5650-008	Reversing Valve Solenoid Coil	x	x	x	x	x	x	x	x	x
5210-005	Strainer	(2)	(2)	(2)	(2)	(2)	(2)	(2)	(2)	(2)
8607-010	Terminal Board	x	x	x	x	x	x	x	x	x
8607-013	Terminal Block	x		x		x				
8607-014	Terminal Block		x		x		x	x	x	x
8612-012	Timer 30/60 Min.	x	x	x	x	x	x	x	x	x
8407-035	Transformer	x	x	x	x		x	x	x	x
8407-004	Transformer - Stepdown							x	x	x
8201-045	Relay - Time Delay					x				
8407-036	Transformer					x				
8614-036	Circuit Breaker					x				
8200-028	Motor Mount			x	x	x	x		x	x
8607-017	Terminal Block							x	x	x
4066-110	Wiring Diagram					x				
4066-111	Wiring Diagram	x		x						
4066-210	Wiring Diagram		x		x		x			
4066-310	Wiring Diagram							x	x	x

Minimum net billing $15.00. Supersedes all previous lists.
Subject to change without notice.

HEAT PUMP
PROCEDURE FOR
LEAK TEST-EVACUATION-CHARGING

GAUGE MANIFOLD

A necessary instrument in checking and servicing air conditioning and heat pump equipment is the gauge manifold. Its purpose is to determine the operating refrigerant pressures in order for the serviceman to analyze the condition of the system.

The valving on the manifold is so arranged that when the valves are closed (front-seated) the center port on the manifold is closed to the gauges and gauge ports. With the valves in the closed position, the gauge ports are still open to the gauges, permitting the gauges to register system pressures. Opening either valve opens the center port to that side of the manifold and system.

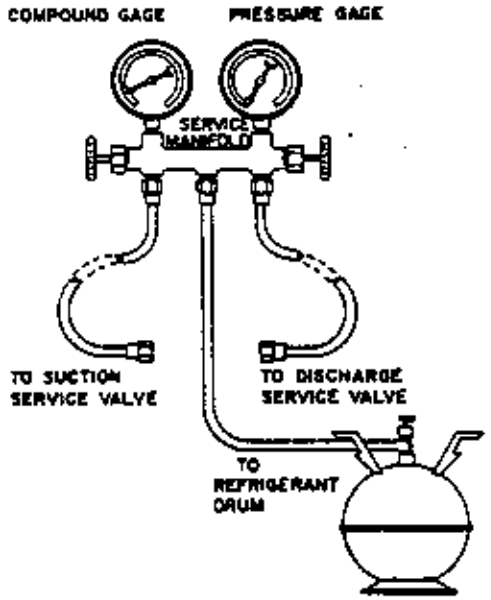

ATTACHING GAUGE MANIFOLD

For leak testing, purging, checking charge, charging liquid or evacuating, connect high pressure side of gauge manifold to Schrader valve on liquid or discharge line. Connect suction side of gauge manifold to Schrader valve on suction line. On heat pumps the suction line is between compressor and reversing valve.

ATTACHING MANIFOLD HOSE TO SCHRADER VALVE

WARNING

As a safety measure, it is wise to attach refrigerant hoses at the lowest pressure readings on the system. To do this:

(a) Put high pressure hose (B) on first. (Unit should not be running).

(b) Put low pressure hose (A) on second. (Unit should be running).

1. Remove cap from valve.
2. Make sure gauge manifold valves are closed.
3. If hose does not have an unseating pin, a number 395 Superior or equivalent unseating coupler must be used.

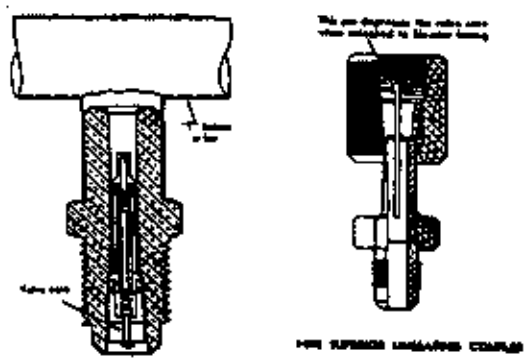

4. Make sure coupler is lined up straight with Schrader valve. Screw coupler on to valve.
5. Open gauge manifold valve slightly and purge air from hose with refrigerant.
6. Read the suction pressure on compound gauge and heat pressure on pressure gauge.
7. To remove, push end of hose tight against end of Schrader valve and hold in place while quickly unscrewing coupler nut from Schrader valve.
8. Remove coupler from Schrader valve. Replace caps on valve.

WARNING

As a safety measure, it is wise to detach refrigerant hoses at the lowest pressure readings on the system. To do this:

(a) Remove the suction pressure hose (A) first. (Unit is running).

(b) Remove the high pressure hose (B) next. (Unit is not running).

LEAK TEST

1. Remove gauge port cap from suction and liquid service valve ports and attach manifold gauge hoses. Connect an upright R22 drum to center port of gauge manifold. Open refrigerant drum valve and manifold high pressure gauge valve to pressurize system. Pressurize the complete system with R22 until the pressure reaches 100 psig. DO NOT exceed 150 psig.
2. Close manifold high pressure gauge valve. Check all soldered joints, including those on the evaporator coil with an Electronic Leak Detector. If a leak is found which requires soldering, pressure in the system must be bled off since it is impossible to solder with unit pressurized. Be sure all leaks are located and marked before bleeding pressure from system.
3. Close drum valve and disconnect from center port. Release refrigerant into the atmosphere through suction line of gauge manifold.
4. Correct any leaks and recheck. When leaks, if any have been repaired, system is ready to be evacuated and charged. Relieve all pressure from the system down to 0 psig.

EVACUATION

1. Evacuate the system to less than 1000 microns, using a good vacuum pump and an accurate high vacuum gauge. Operate the pump below 1000 microns for 60 minutes and then close valve to the vacuum pump. Allow the system to stand for 30 additional minutes to be sure a 1000 micron vacuum or less is maintained.

2. An alternate method of removing moisture and noncondensables from the system is:

   a) Evacuate system to 29 inches vacuum for ten minutes per ton of system. Break vacuum with refrigerant to be used for final charging of system and vapor charge to 35-50 lbs. gauge pressure. Leave vapor charge in system for a minimum of five minutes. Reduce pressure to five to zero gauge pressure.

   b) Repeat step (a) two more times.

   c) Evacuate system to 30 inches vacuum for twenty minutes per ton. Charge system with the specified kind and quantity of refrigerant (charge into vacuum).

WARNING

At no time use the compressor to evacuate the system or any part of it.

3. Disconnect charging line at vacuum pump and connect to refrigerant supply. (Dial-A-Charge Cylinder) crack valve and purge charging line at center on manifold. Then close valve.

4. The system is now ready for the correct operating charge of Refrigerant 22.

CHARGING

1. SINGLE PACKAGE UNITS - Refer to the unit serial plate for the full operating charge.

2. SPLIT SYSTEMS - The outdoor unit factory charge is shown on the unit serial plate. The total system charge required to recharge the system after service repairs should be marked on the serial plate under TOTAL R22 CHARGE. This is normally marked by the installer and is determined from the R22 System Charge Table located on the inside of the outdoor unit access panel.

3. CTO ADAPTER KITS - When using CTO adapters and field tubing, use the procedure outlined on the bottom of page 3, Manual 2100-602. This determines the correct ounces of R22 for the tubing only.

4. FILTER-DRIER CHARGES - If a liquid line filter-drier is used, either in conjunction with field tubing and a CTO adapter kit, or as part of procedure for system clean-up after a compressor burn-out, additional R22 must be added to the system when recharging. This is in addition to the amount determined from the R22 System Charge Table.

PART NO.	MODEL NO.	OZ. of R22
5202-001	C-083S	8
5202-002	C-163S	10
5201-009	BFK-083S	7
5201-010	BFK-163S	13

PRELIMINARY CHARGING STEPS

If the system has been open to the atmosphere, it should be first evacuated. Then proceed as follows:

1. Attach a drum of proper, clean refrigerant to the center port of the charging manifold with one of the charging hoses.

2. Attach a second charging hose to the suction gauge (low pressure) side of the gauge manifold.

3. Remove the cap from the suction line valve.

4. Loosely attach the suction gauge hose to the line valve. Open the valve on the refrigerant drum and the suction valve on the charging manifold slightly to purge the air from the manifold and hoses before tightening the fitting.

5. Attach the third hose to the high pressure side of the manifold and the liquid line valve. Repeat steps 3 and 4 above.

CHARGING THE SYSTEM BY WEIGHT*

1. Connect manifold as instructed.

2. Place refrigerant drum upright on scale and determine exact weight of the refrigerant and cylinder or use a Dial-A-Charge cylinder.

3. With manifold suction valve closed and manifold discharge valve open, open refrigerant cylinder valve and allow pressure in system to balance with pressure of cylinder. For charging in the liquid phase, drum is placed upside down (valve down).

4. When there is approximately a full charge, front seat (close) the discharge manifold valve and let the system stabilize for about five minutes.

5. Start compressor by setting thermostat.

6. Finish charging with vapor by placing drum upright (valve up). Open drum valve and manifold low pressure valve to allow refrigerant to flow into the system. Throttle refrigerant drum valve to keep pressure about 100 psig for R22.

7. When the correct weight of refrigerant has been added to the unit, close refrigerant cylinder valve and allow unit to run for 30 minutes. Refer to Start-Up Procedure and Check List for further start-up details. Check the charge against the allowable head pressure as shown in the Head Pressure Chart and correct if needed.

8. Front seat gauge manifold valves, disconnect charging and gauge hoses and replace all valve caps.

WARNING

To speed refrigerant flow, it may be necessary to place refrigerant drum in a pan of warm water (not greater than 130°F). Remember to either consider the total weight of the pan of water or remove the drum for weighing frequently to keep track of the charging process.

*This charging method requires the scales or Dial-A-Charge cylinder to be extremely accurate since the charge in this type of system is quite critical.

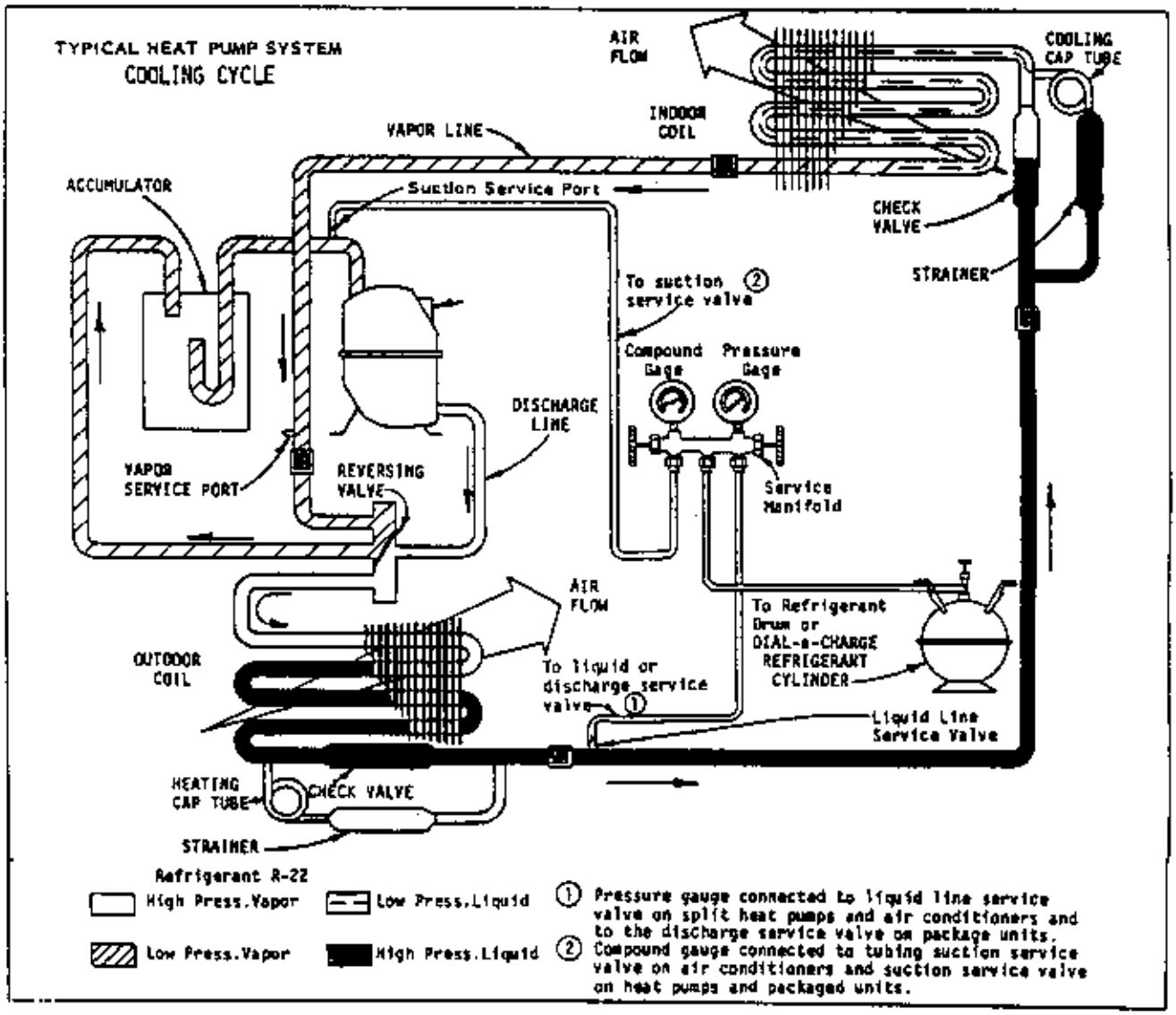

AIR CONDITIONING AND HEAT PUMP ON COOLING CYCLE

TROUBLESHOOTING — SYSTEM PRESSURE CHECK

Low Suction — Low Head Pressure

1. Restricted air flow over indoor coil.
2. Defective indoor fan motor.
3. Low indoor and outdoor temperature.
4. Iced indoor coil.
5. Restricted liquid line, drier, or capillary tube.
6. Low charge.

High Suction — Low Head Pressure

1. Defective or broken valves.
2. IPRV valve open.

Low Suction — High Head Pressure

1. Partial restriction and then overcharged.

Note: On a split heat pump the vapor line should be within 10 psig of the pressure in liquid line on heating mode and within 10 psig of suction line on cooling mode. If not, check for sticking check valves.

High Suction — High Head Pressure

1. High ambient.
2. Low outdoor air flow
3. Overcharged.
4. Air in system.
5. Restricted condenser.

QUICK REFERENCE TROUBLE-SHOOTING CHART FOR AIR TO AIR HEAT PUMP

● DENOTES COMMON CAUSE

▲ DENOTES OCCASIONAL CAUSE

		POWER SUPPLY																			
	POSSIBLE CAUSE	LINE VOLTAGE												CONTROL CIRCUIT							
	PROBLEM CONDITION	POWER FAILURE	BLOWN FUSE OR TRIPPED BREAKER	FAULTY WIRING	LOOSE TERMINALS	LOW VOLTAGE	SINGLE 1ø FAILURE OF 3ø	UNBALANCED 3 ø	DEFECTIVE CONTACTS IN CONTACTOR	COMPRESSOR OVERLOAD	POTENTIAL RELAY	RUN CAPACITOR	START CAPACITOR	FAULTY WIRING	LOOSE TERMINALS	CONTROL TRANSFORMER	LOW VOLTAGE	THERMOSTAT	CONTACTOR COIL	PRESSURE CONTROL OR IMPEDANCE RELAY	INDOOR FAN RELAY
HEATING OR COOLING CYCLES	COMPRESSOR AND O.D. FAN MOTOR DO NOT OPERATE	●	●	●	●		▲	▲	▲	▲				●	●	●	▲	▲	●	●	
	COMPRESSOR WILL NOT RUN O.D. FAN MOTOR RUNS			●	●	●	▲	▲		●	●	●	●								
	COMPRESSOR "HUMS" BUT WILL NOT START			●	●	●	●	▲	▲		●	●	●								
	COMPRESSOR CYCLES ON OVERLOAD			●	●	●	▲	▲	▲	●	●	●	●								
	COMPRESSOR OFF ON HIGH PRESSURE CONTROL																			▲	●
	COMPRESSOR NOISY																				
	HEAD PRESSURE TOO HIGH																				
	HEAD PRESSURE TOO LOW																				
	SUCTION PRESSURE TOO HIGH																				
	SUCTION PRESSURE TOO LOW																				
	I.D. BLOWER WILL NOT START	●	●	●	●									●	●	●	▲	▲			●
	I.D. COIL FROSTING OR ICING																				
	HIGH COMPRESSOR AMPS					●															
COOLING CYCLE	COMPRESSOR RUNS CONTINUOUSLY—NO COOLING																				
	LIQUID REFRIGERANT FLOODING BACK TO COMPRESSOR																				
HEATING CYCLE	COMPRESSOR RUNS CONTINUOUSLY— NO HEATING																				
	DEFROST CYCLE INITIATES NO ICE ON COIL																				
	REVERSING VALVE DOES NOT SHIFT			●	●																
	ICE BUILD UP ON LOWER PART OF O.D. COIL																				
	LIQUID REFRIGERANT FLOODING BACK TO COMPRESSOR																				
	AUX. HEAT ON I.D. BLOWER OFF			●	●									●	●			▲			●
	EXCESSIVE OPERATING COSTS			▲	▲													▲			
	EXCESSIVE ICE ON O.D. COIL			▲	▲																

		OUTDOOR SECTION																			
	POSSIBLE CAUSE	COMPRESSOR					REFRIGERANT SYSTEM								DEFROST CONTROL			REV. VALVE		CHECK VALVE	
	PROBLEM CONDITION	DISCHARGE LINE HITTING INSIDE OF SHELL	BEARINGS DEFECTIVE	SEIZED	VALVE DEFECTIVE	MOTOR WINDINGS DEFECTIVE	REFRIGERANT CHARGE LOW	REFRIGERANT OVERCHARGE	HIGH HEAD PRESSURE	LOW HEAD PRESSURE	HIGH SUCTION PRESSURE	LOW SUCTION PRESSURE	NON-CONDENSABLES	UNEQUALIZED PRESSURES	SENSING BULB LOOSE-POORLY LOCATED	CYCLE TOO LONG (CLOCKTIMER)	DEFECTIVE CONTROL, TIMER OR RELAY	LEAKING	DEFECTIVE VALVE OR COIL	STICKING CLOSED	LEAKING OR DEFECTIVE
HEATING OR COOLING CYCLES	COMPRESSOR AND O.D. FAN MOTOR DO NOT OPERATE																				
	COMPRESSOR WILL NOT RUN O.D. FAN MOTOR RUNS		▲	●		●								●							
	COMPRESSOR "HUMS" BUT WILL NOT START		●	●		●								●							
	COMPRESSOR CYCLES ON OVERLOAD		▲		▲	▲	●	●	▲		▲		●					▲			
	COMPRESSOR OFF ON HIGH PRESSURE CONTROL							●					●		▲	●	●			●	
	COMPRESSOR NOISY	▲	▲		●																
	HEAD PRESSURE TOO HIGH							●					●		▲	▲			▲	▲	
	HEAD PRESSURE TOO LOW				●		●					●						●			▲
	SUCTION PRESSURE TOO HIGH				●			●	●									●			▲
	SUCTION PRESSURE TOO LOW						●			▲										▲	
	I.D. BLOWER WILL NOT START																				
	I.D. COIL FROSTING OR ICING						●					●								▲	
	HIGH COMPRESSOR AMPS		●	●				●	●		●		●							▲	
COOLING CYCLE	COMPRESSOR RUNS CONTINUOUSLY—NO COOLING				●		●														
	LIQUID REFRIGERANT FLOODING BACK TO COMPRESSOR							●	●												
HEATING CYCLE	COMPRESSOR RUNS CONTINUOUSLY— NO HEATING				●		●									▲	▲	●			
	DEFROST CYCLE INITIATES NO ICE ON COIL						▲										●				
	REVERSING VALVE DOES NOT SHIFT						▲			▲									●		
	ICE BUILD UP ON LOWER PART OF O.D. COIL						●					▲			●	●	●				
	LIQUID REFRIGERANT FLOODING BACK TO COMPRESSOR							●	●												
	AUX. HEAT ON I.D. BLOWER OFF																				
	EXCESSIVE OPERATING COSTS						●	●									●	●	●		
	EXCESSIVE ICE ON O.D. COIL						●								●	●	●		●		

		OUTDOOR SECTION						INDOOR SECTION								AUX. HEAT
	POSSIBLE CAUSE	OUTDOOR FAN MOTOR & COIL						INDOOR BLOWER MOTOR & COIL						CHECK		
	PROBLEM CONDITION	PLUGGED OR RESTRICTED CAP-TUBE(HTG)	FINS DIRTY OR PLUGGED	MOTOR WINDING DEFECTIVE	RE-CIRCULATION OF AIR	AIR VOLUME LOW (CLG)	LOW TEMPERATURE COIL AIR (CLG)	PLUGGED OR RESTRICTED CAP-TUBE(CLG)	FINS DIRTY OR PLUGGED	MOTOR WINDING DEFECTIVE	AIR VOLUME LOW	AIR FILTERS DIRTY	UNDERSIZED OR RESTRICTED DUCTWORK	STICKING CLOSED	LEAKING OR DEFECTIVE	AUX. HEAT UPSTREAM OF COIL
HEATING OR COOLING CYCLES	COMPRESSOR AND O.D. FAN MOTOR DO NOT OPERATE															
	COMPRESSOR WILL NOT RUN O.D. FAN MOTOR RUNS															
	COMPRESSOR "HUMS" BUT WILL NOT START															
	COMPRESSOR CYCLES ON OVERLOAD		▲	▲	▲	▲			▲	▲	▲	●	▲			
	COMPRESSOR OFF ON HIGH PRESSURE CONTROL	▲	●	●	●	●		▲	●	●	●	●	●	●		●
	COMPRESSOR NOISY															
	HEAD PRESSURE TOO HIGH	▲	●	●	▲	●		▲	▲	▲	●	●	▲	▲		●
	HEAD PRESSURE TOO LOW						●								▲	
	SUCTION PRESSURE TOO HIGH														▲	
	SUCTION PRESSURE TOO LOW	▲	●	●	▲		▲	▲	●	▲	●	●	▲	▲		
	I.D. BLOWER WILL NOT START															
	I.D. COIL FROSTING OR ICING							▲	●	●	●	●	▲			
	HIGH COMPRESSOR AMPS								●	●	●	●	▲	▲		
COOLING CYCLE	COMPRESSOR RUNS CONTINUOUSLY—NO COOLING		▲	▲	▲	▲	▲		●	●	●	●	▲			
	LIQUID REFRIGERANT FLOODING BACK TO COMPRESSOR								●	●	●	●	▲	▲		
HEATING CYCLE	COMPRESSOR RUNS CONTINUOUSLY— NO HEATING															
	DEFROST CYCLE INITIATES NO ICE ON COIL															
	REVERSING VALVE DOES NOT SHIFT															
	ICE BUILD UP ON LOWER PART OF O.D. COIL															
	LIQUID REFRIGERANT FLOODING BACK TO COMPRESSOR															
	AUX. HEAT ON I.D. BLOWER OFF									●						
	EXCESSIVE OPERATING COSTS		▲	▲	▲				▲	▲	▲					
	EXCESSIVE ICE ON O.D. COIL															

F1238-387

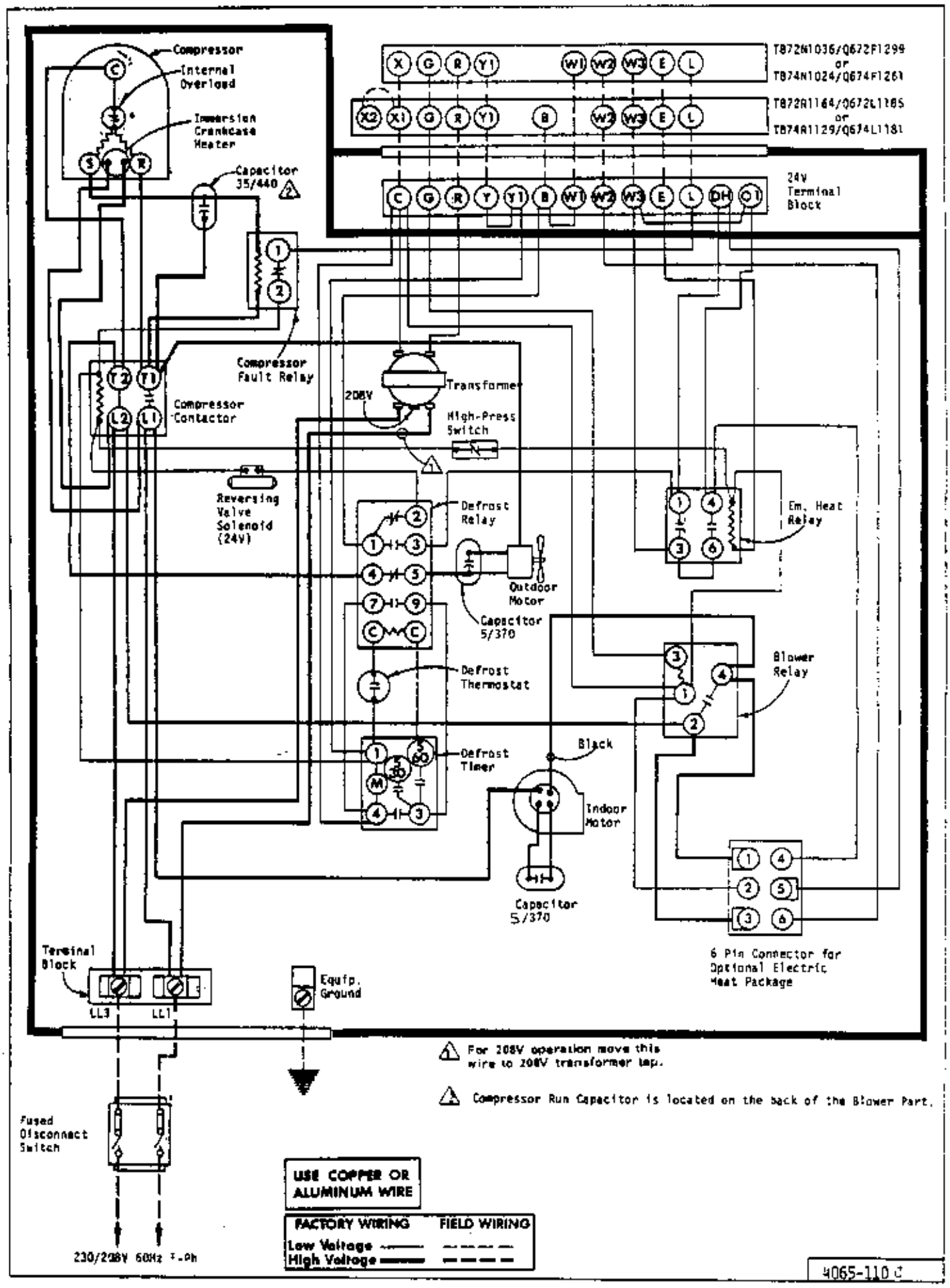
Compressor
Internal Overload
Immersion Crankcase Heater
Capacitor 35/440
TB72N1036/Q672F1299 or TB74N1024/Q674F1261
TB72N1164/Q672L1185 or TB74N1129/Q674L1181
24V Terminal Block
Compressor Fault Relay
Compressor Contactor
Transformer
208V
High-Press Switch
Reversing Valve Solenoid (24V)
Defrost Relay
Em. Heat Relay
Outdoor Motor
Capacitor 5/370
Defrost Thermostat
Blower Relay
Defrost Timer
Black
Indoor Motor
Capacitor 5/370
6 Pin Connector for Optional Electric Heat Package
Terminal Block
LL3
LL1
Equip. Ground
For 208V operation move this wire to 208V transformer tap.
Compressor Run Capacitor is located on the back of the Blower Part.
Fused Disconnect Switch
230/208V 60Hz 1-Ph
USE COPPER OR ALUMINUM WIRE
FACTORY WIRING
FIELD WIRING
Low Voltage
High Voltage
4065-110 C

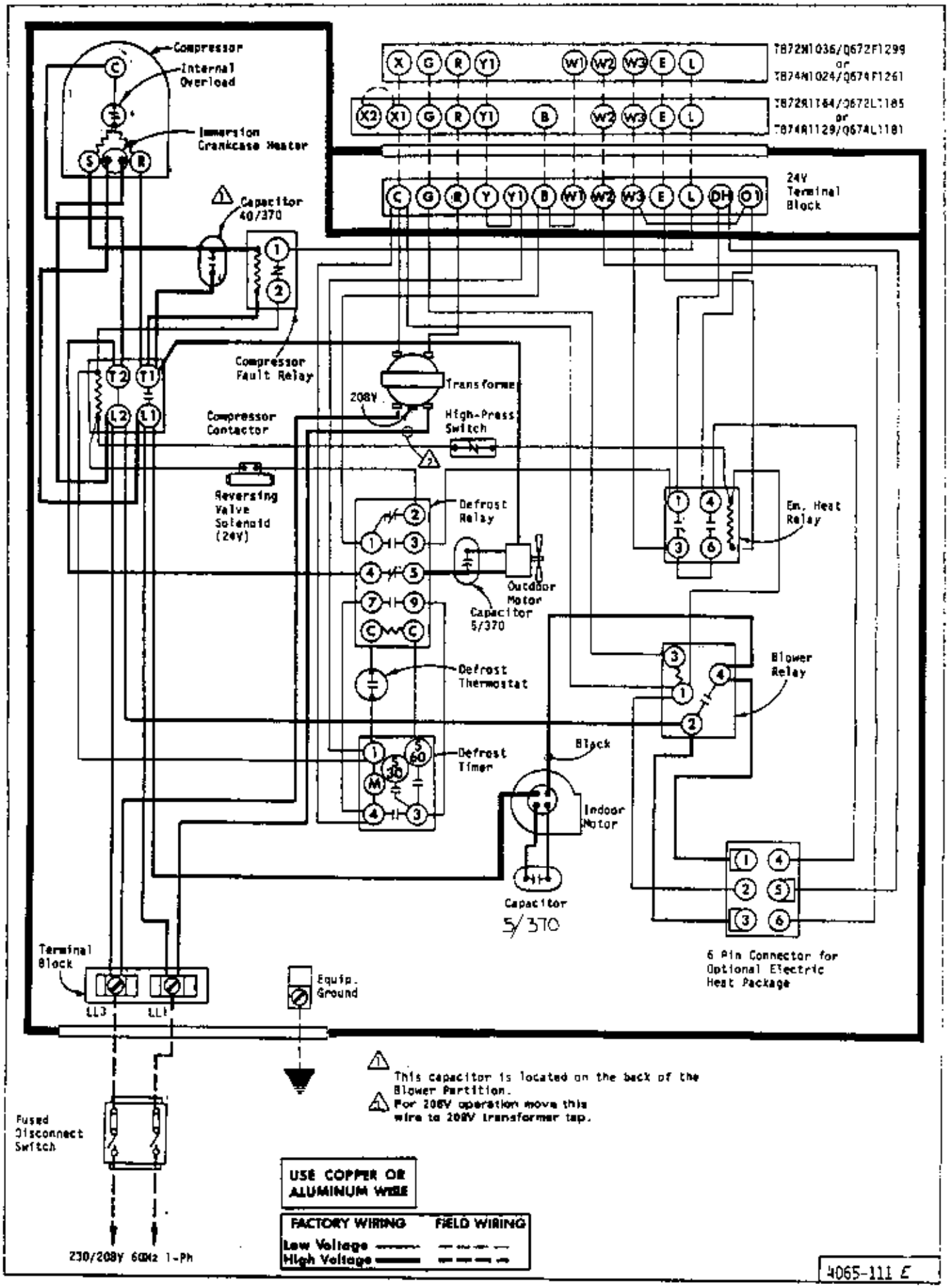
Compressor
Internal Overload
Immersion Crankcase Heater
Capacitor 40/370
Compressor Fault Relay
Compressor Contactor
Reversing Valve Solenoid (24V)
Transformer
208V
High-Press Switch
Defrost Relay
Outdoor Motor
Capacitor 5/370
Defrost Thermostat
Defrost Timer
Black
Indoor Motor
Capacitor 5/370
Em. Heat Relay
Blower Relay
6 Pin Connector for Optional Electric Heat Package
24V Terminal Block
TB72N1036/Q672F1299 or TB74N1024/Q674F1261
TB72N1164/Q672L1185 or TB74N1129/Q674L1181
Terminal Block
Equip. Ground
Fused Disconnect Switch
230/208V 60Hz 1-Ph
This capacitor is located on the back of the Blower Partition.
For 208V operation move this wire to 208V transformer tap.
USE COPPER OR ALUMINUM WIRE
FACTORY WIRING
FIELD WIRING
Low Voltage
High Voltage
4065-111 E

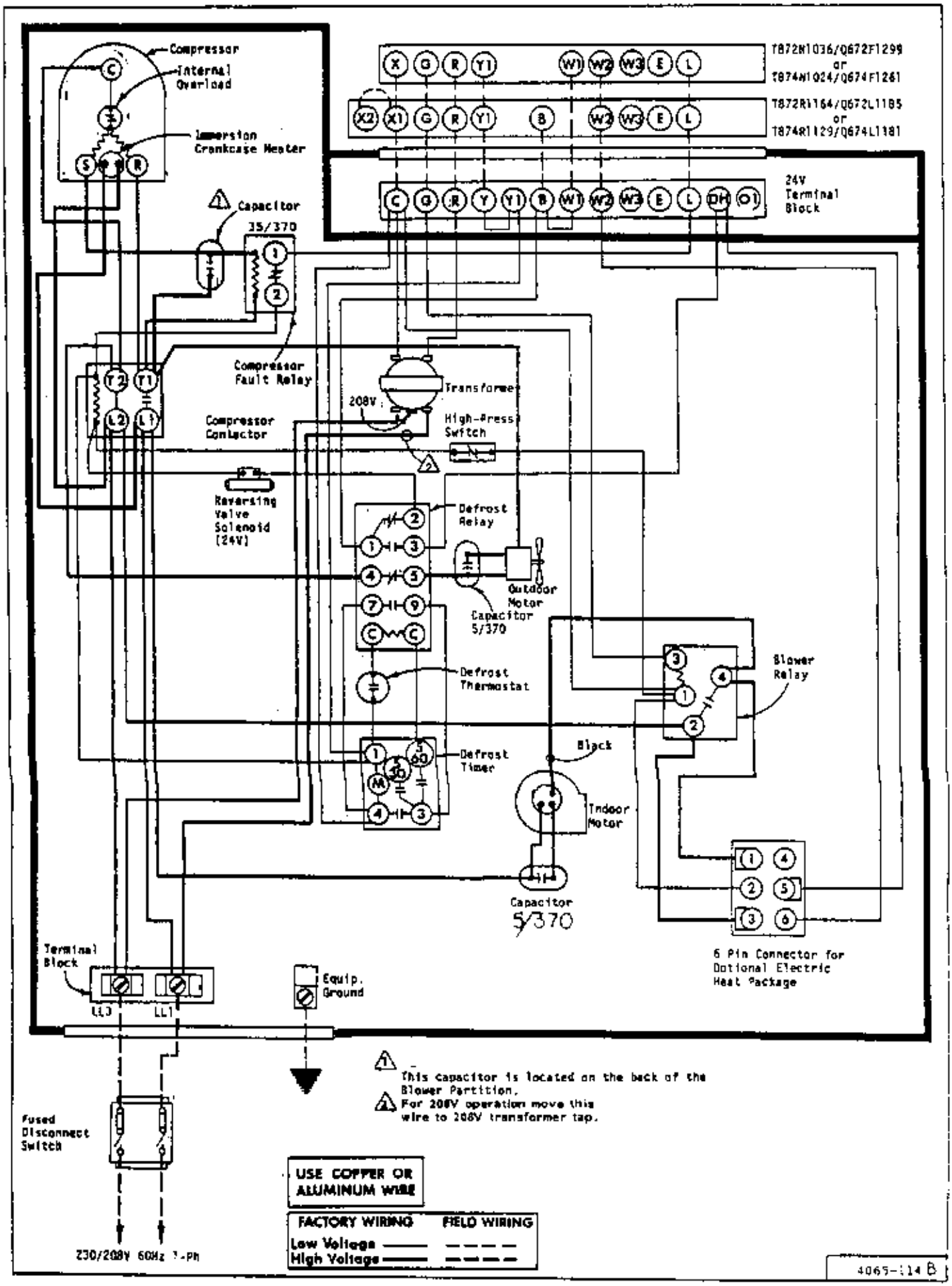
Compressor
Internal Overload
Immersion Crankcase Heater
C
S
R
X
G
R
Y1
W1
W2
W3
E
L
T872N1036/Q672F1299
or
T874N1024/Q674F1261
X2
X1
B
T872R1164/Q672L1185
or
T874R1129/Q674L1181
Y
DH
O1
24V Terminal Block
Capacitor 35/370
Compressor Fault Relay
T2
T1
L2
L1
Compressor Contactor
Transformer
208V
High-Press Switch
Reversing Valve Solenoid (24V)
Defrost Relay
Outdoor Motor
Capacitor 5/370
Defrost Thermostat
Blower Relay
Black
Defrost Timer
M
Indoor Motor
Capacitor 5/370
6 Pin Connector for Optional Electric Heat Package
Terminal Block
LL2
LL1
Equip. Ground
Fused Disconnect Switch
230/208V 60Hz 1-Ph
This capacitor is located on the back of the Blower Partition.
For 208V operation move this wire to 208V transformer tap.
USE COPPER OR ALUMINUM WIRE
FACTORY WIRING
FIELD WIRING
Low Voltage
High Voltage
4065-114 B

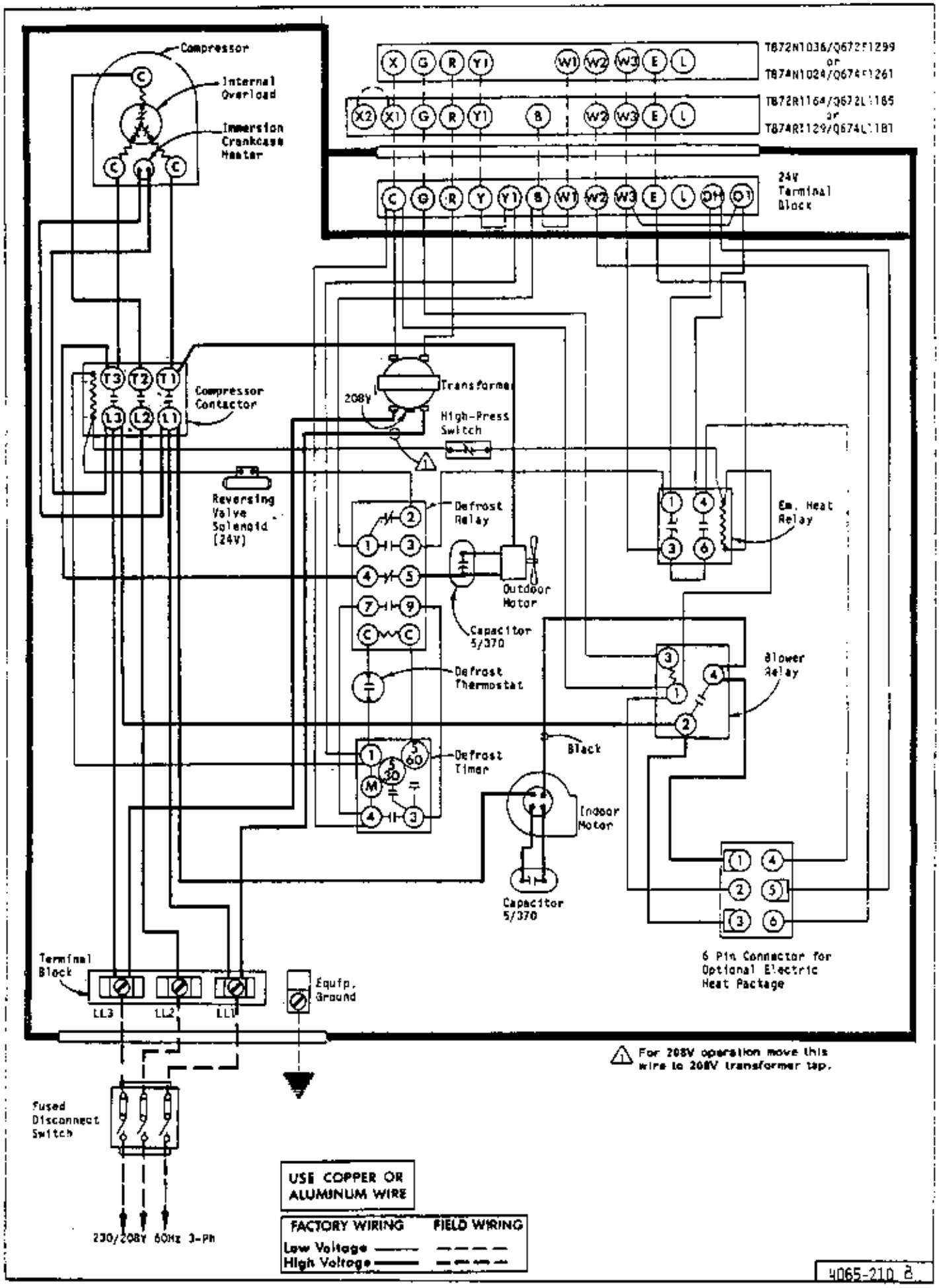
Compressor
Internal Overload
Immersion Crankcase Heater
T872N1036/Q672S1299 or T874N1024/Q674S1261
T872R1164/Q672L1185 or T874R1129/Q674L1181
24V Terminal Block
Compressor Contactor
Transformer
208V
High-Press Switch
Reversing Valve Solenoid (24V)
Defrost Relay
Em. Heat Relay
Outdoor Motor
Capacitor 5/370
Defrost Thermostat
Blower Relay
Black
Defrost Timer
Indoor Motor
Capacitor 5/370
6 Pin Connector for Optional Electric Heat Package
Terminal Block
LL3
LL2
LL1
Equip. Ground
For 208V operation move this wire to 208V transformer tap.
Fused Disconnect Switch
230/208V 60Hz 3-Ph
USE COPPER OR ALUMINUM WIRE
FACTORY WIRING
FIELD WIRING
Low Voltage
High Voltage
4065-210 B

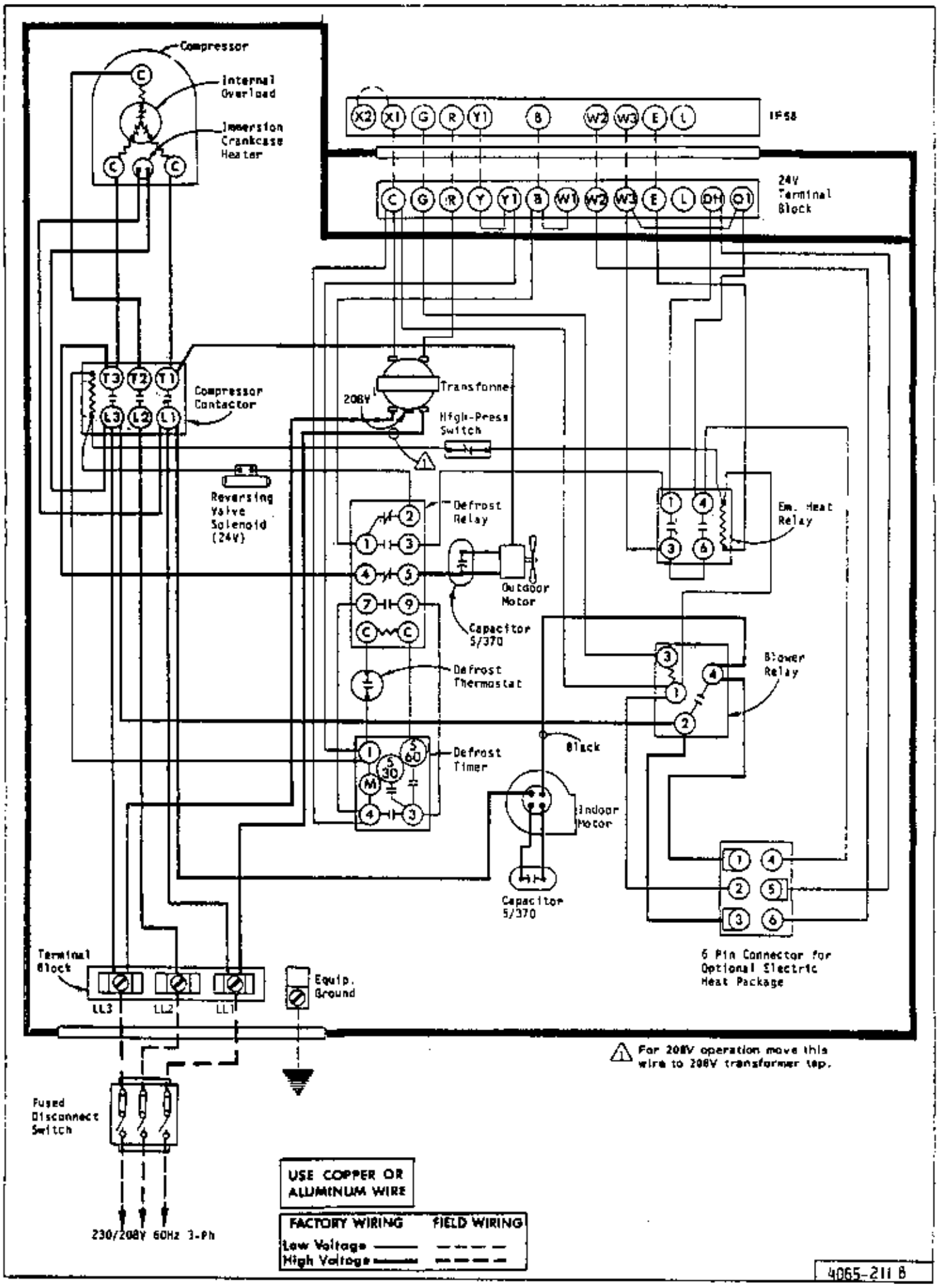
Compressor
Internal Overload
Immersion Crankcase Heater
IFSS
24V Terminal Block
Compressor Contactor
Transformer
208V
High-Press Switch
Reversing Valve Solenoid (24V)
Defrost Relay
Em. Heat Relay
Outdoor Motor
Capacitor 5/370
Defrost Thermostat
Blower Relay
Black
Defrost Timer
Indoor Motor
Capacitor 5/370
6 Pin Connector for Optional Electric Heat Package
Terminal Block
LL3
LL2
LL1
Equip. Ground
For 208V operation move this wire to 208V transformer tap.
Fused Disconnect Switch
230/208V 60Hz 3-Ph
USE COPPER OR ALUMINUM WIRE
FACTORY WIRING
FIELD WIRING
Low Voltage
High Voltage
4065-211 B

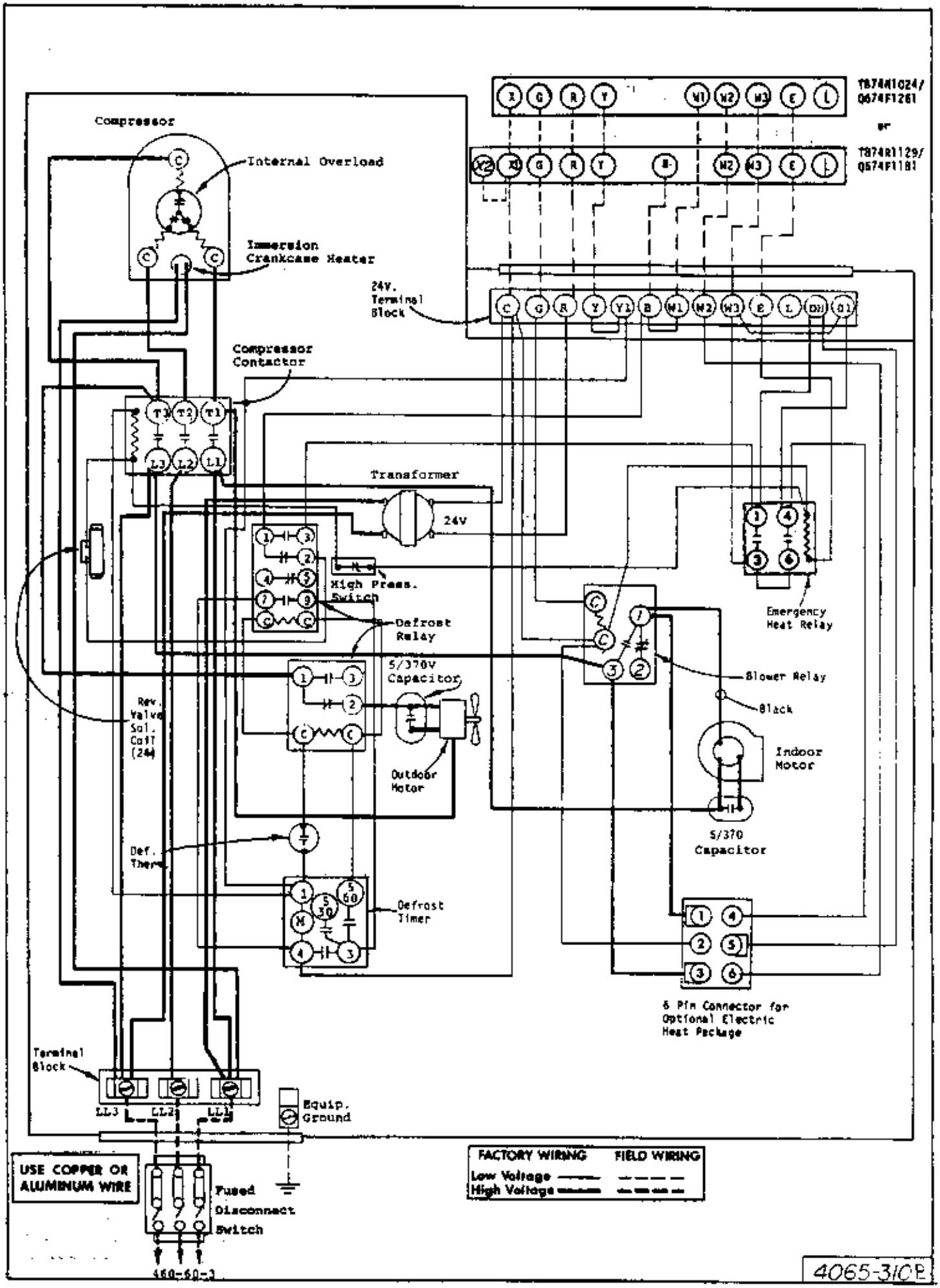
T874R1024/
Q674F1261
or
T874R1129/
Q674F1181
Compressor
Internal Overload
Immersion
Crankcase Heater
24V.
Terminal
Block
Compressor
Contactor
Transformer
24V
High Press.
Switch
Defrost
Relay
5/370V
Capacitor
Rev.
Valve
Sol.
Coil
(24)
Outdoor
Motor
Def.
Therm.
Defrost
Timer
Emergency
Heat Relay
Blower Relay
Black
Indoor
Motor
5/370
Capacitor
6 Pin Connector for
Optional Electric
Heat Package
Terminal
Block
LL3
LL2
LL1
Equip.
Ground
USE COPPER OR
ALUMINUM WIRE
Fused
Disconnect
Switch
460-60-3
FACTORY WIRING
FIELD WIRING
Low Voltage
High Voltage
4065-31CP

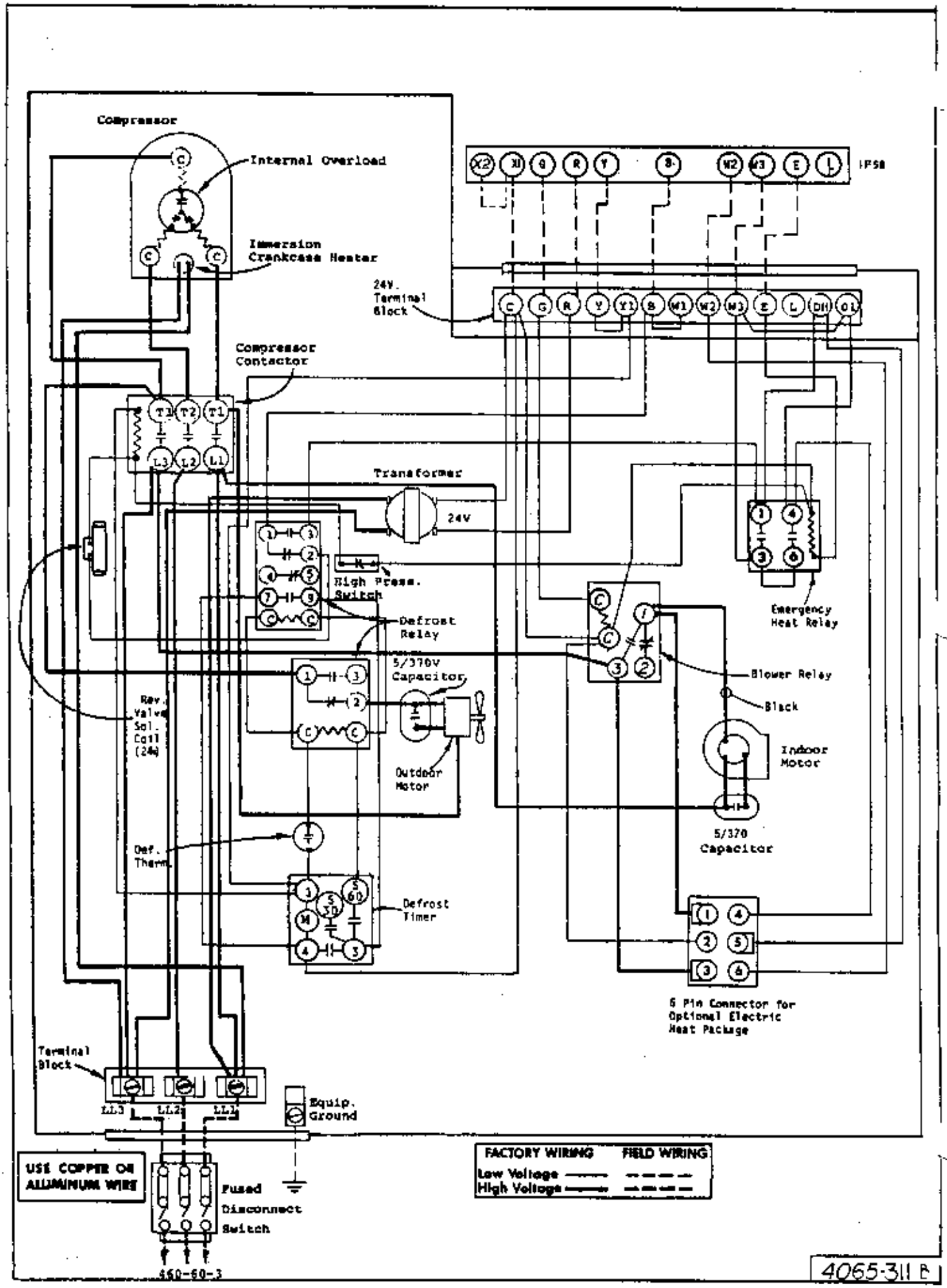
Compressor
Internal Overload
Immersion Crankcase Heater
24V. Terminal Block
Compressor Contactor
Transformer
24V
High Press. Switch
Defrost Relay
5/370V Capacitor
Rev. Valve Sol. Coil (24v)
Outdoor Motor
Def. Therm.
Defrost Timer
Emergency Heat Relay
Blower Relay
Black
Indoor Motor
5/370 Capacitor
6 Pin Connector for Optional Electric Heat Package
Terminal Block
LL3
LL2
LL1
Equip. Ground
USE COPPER OR ALUMINUM WIRE
Fused Disconnect Switch
460-60-3
FACTORY WIRING
FIELD WIRING
Low Voltage
High Voltage
4065-311 B

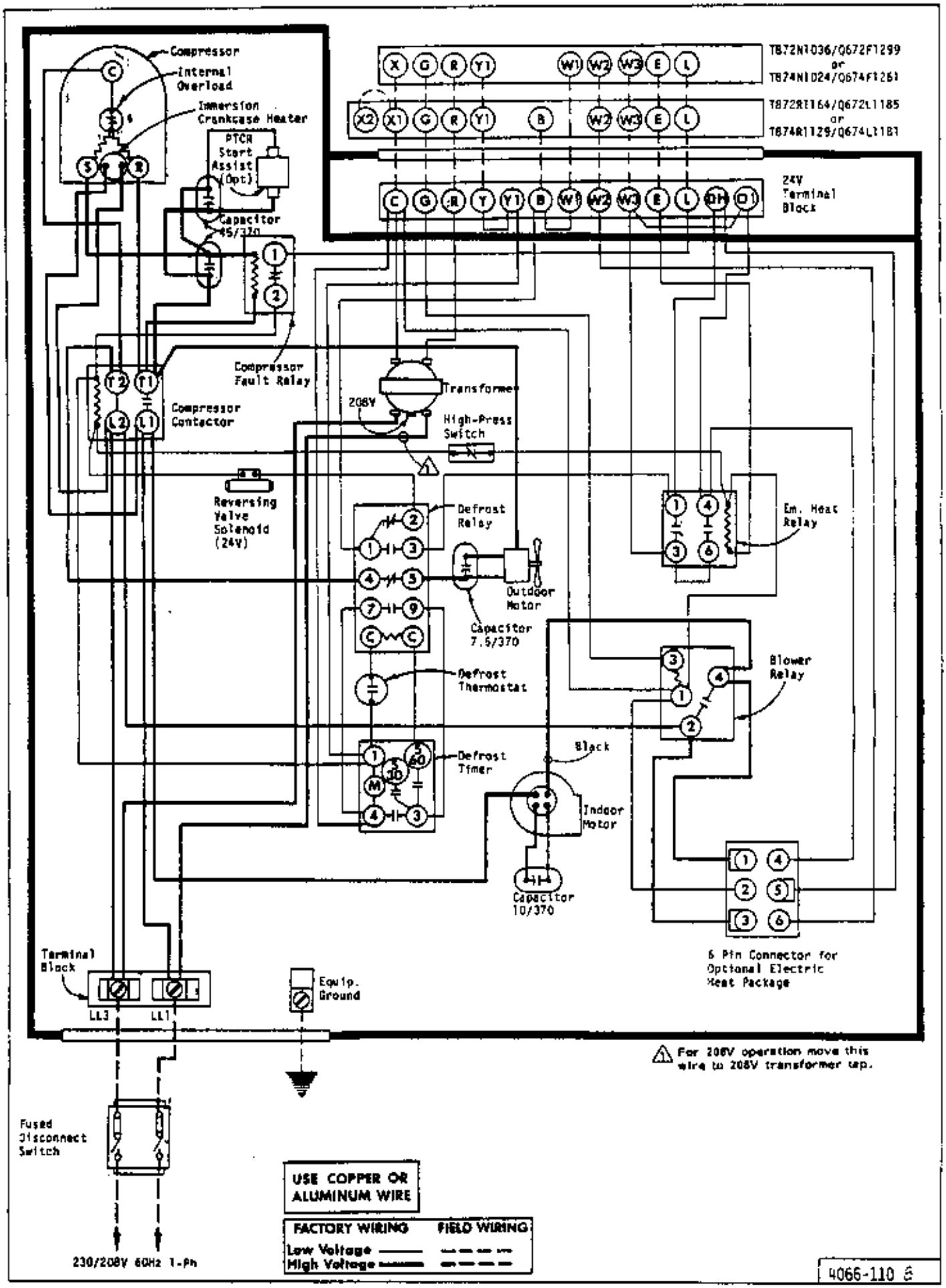
Compressor
Internal Overload
Immersion Crankcase Heater
PTCR Start Assist (Opt)
Capacitor 45/370
TB72N1036/Q672F1299 or TB74N1024/Q674F1261
TB72R1164/Q672L1185 or TB74R1129/Q674L1181
24V Terminal Block
Compressor Fault Relay
Compressor Contactor
Transformer
208V
High-Press Switch
Reversing Valve Solenoid (24V)
Defrost Relay
Em. Heat Relay
Outdoor Motor
Capacitor 7.5/370
Blower Relay
Defrost Thermostat
Defrost Timer
Black
Indoor Motor
Capacitor 10/370
6 Pin Connector for Optional Electric Heat Package
Terminal Block
LL3
LL1
Equip. Ground
For 208V operation move this wire to 208V transformer tap.
Fused Disconnect Switch
230/208V 60Hz 1-Ph
USE COPPER OR ALUMINUM WIRE
FACTORY WIRING
FIELD WIRING
Low Voltage
High Voltage
4066-110

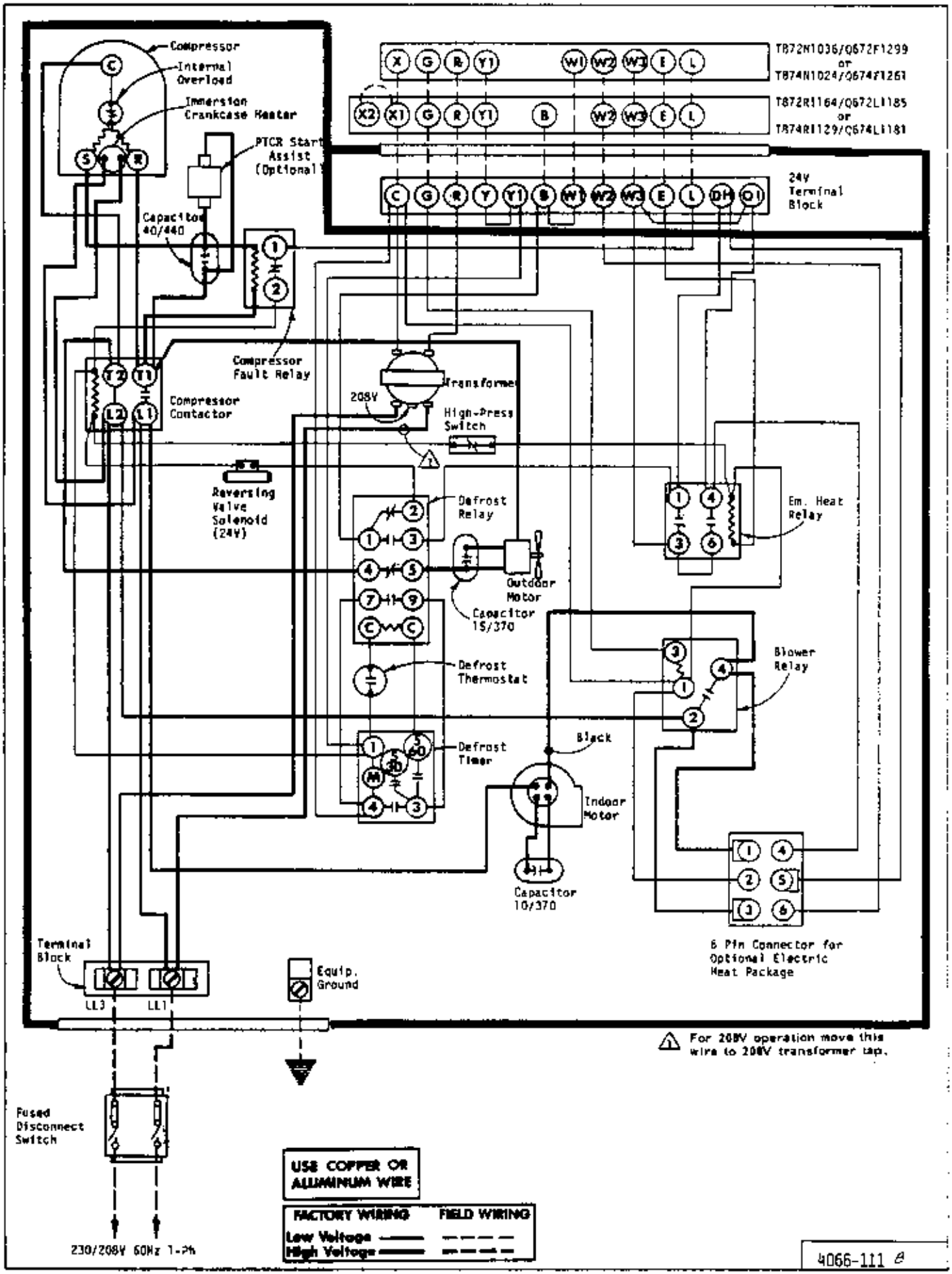
Compressor
Internal Overload
Immersion Crankcase Heater
PTCR Start Assist (Optional)
Capacitor 40/440
Compressor Fault Relay
Compressor Contactor
Transformer
208V
High-Press Switch
Reversing Valve Solenoid (24V)
Defrost Relay
Em. Heat Relay
Outdoor Motor
Capacitor 15/370
Defrost Thermostat
Blower Relay
Defrost Timer
Black
Indoor Motor
Capacitor 10/370
6 Pin Connector for Optional Electric Heat Package
Terminal Block
LL3
LL1
Equip. Ground
Fused Disconnect Switch
230/208V 60Hz 1-Ph
TB72N1036/Q672F1299 or TB74N1024/Q674F1261
TB72R1164/Q672L1185 or TB74R1129/Q674L1181
24V Terminal Block
For 208V operation move this wire to 208V transformer tap.
USE COPPER OR ALUMINUM WIRE
FACTORY WIRING
FIELD WIRING
Low Voltage
High Voltage
4066-111 B

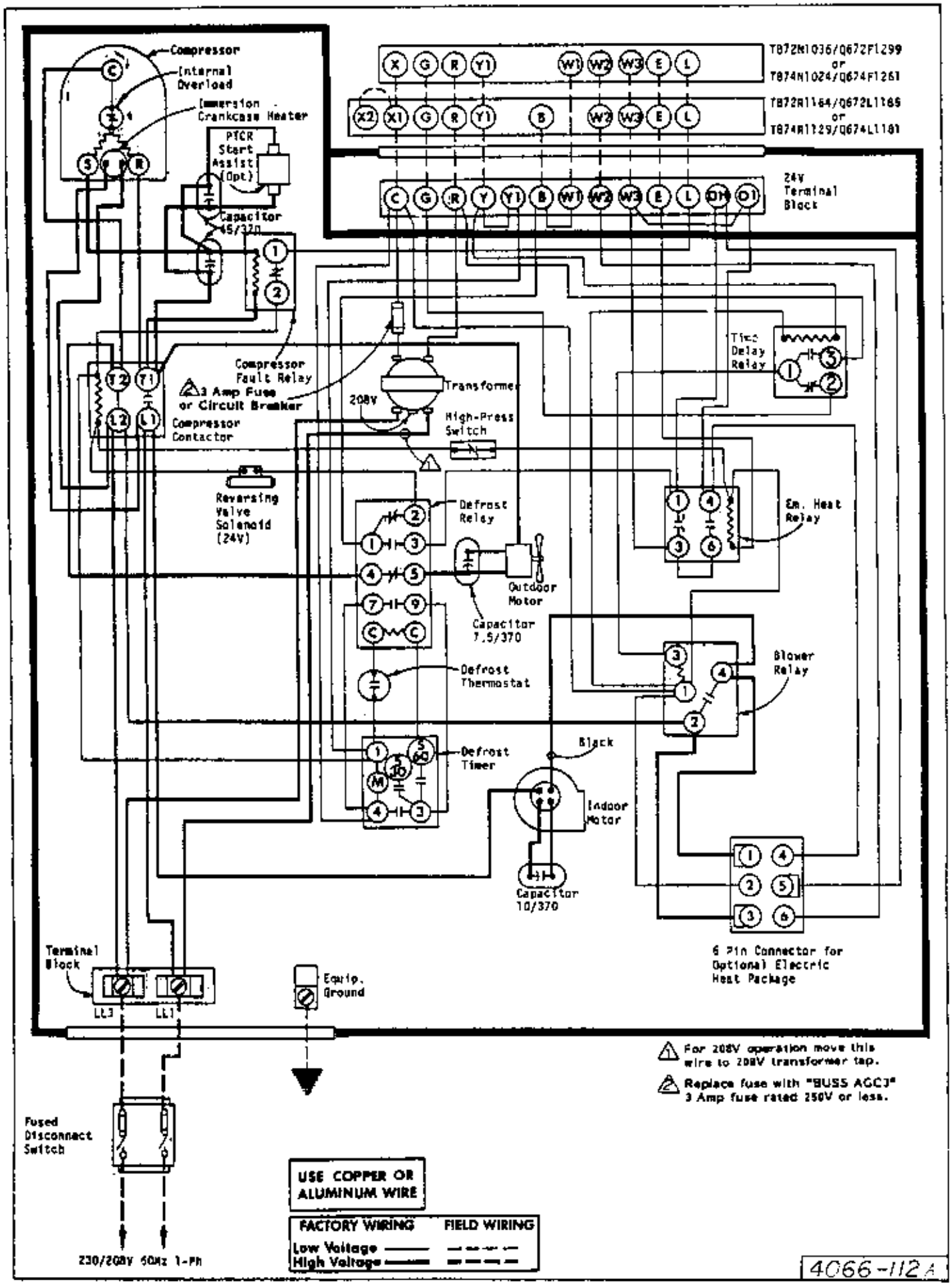
Compressor
Internal Overload
Immersion Crankcase Heater
PTCR Start Assist (Opt)
Capacitor 45/370
T872N1036/Q672F1299 or T874N1024/Q674F1261
T872R1164/Q672L1185 or T874R1129/Q674L1181
24V Terminal Block
Compressor Fault Relay
3 Amp Fuse or Circuit Breaker
Compressor Contactor
Transformer
208V
High-Press Switch
Time Delay Relay
Reversing Valve Solenoid (24V)
Defrost Relay
Em. Heat Relay
Outdoor Motor
Capacitor 7.5/370
Defrost Thermostat
Blower Relay
Defrost Timer
Black
Indoor Motor
Capacitor 10/370
6 Pin Connector for Optional Electric Heat Package
Terminal Block
LL3
LL1
Equip. Ground
For 208V operation move this wire to 208V transformer tap.
Replace fuse with "BUSS AGCJ" 3 Amp fuse rated 250V or less.
Fused Disconnect Switch
230/208V 60Hz 1-Ph
USE COPPER OR ALUMINUM WIRE
FACTORY WIRING
FIELD WIRING
Low Voltage
High Voltage
4066-112A

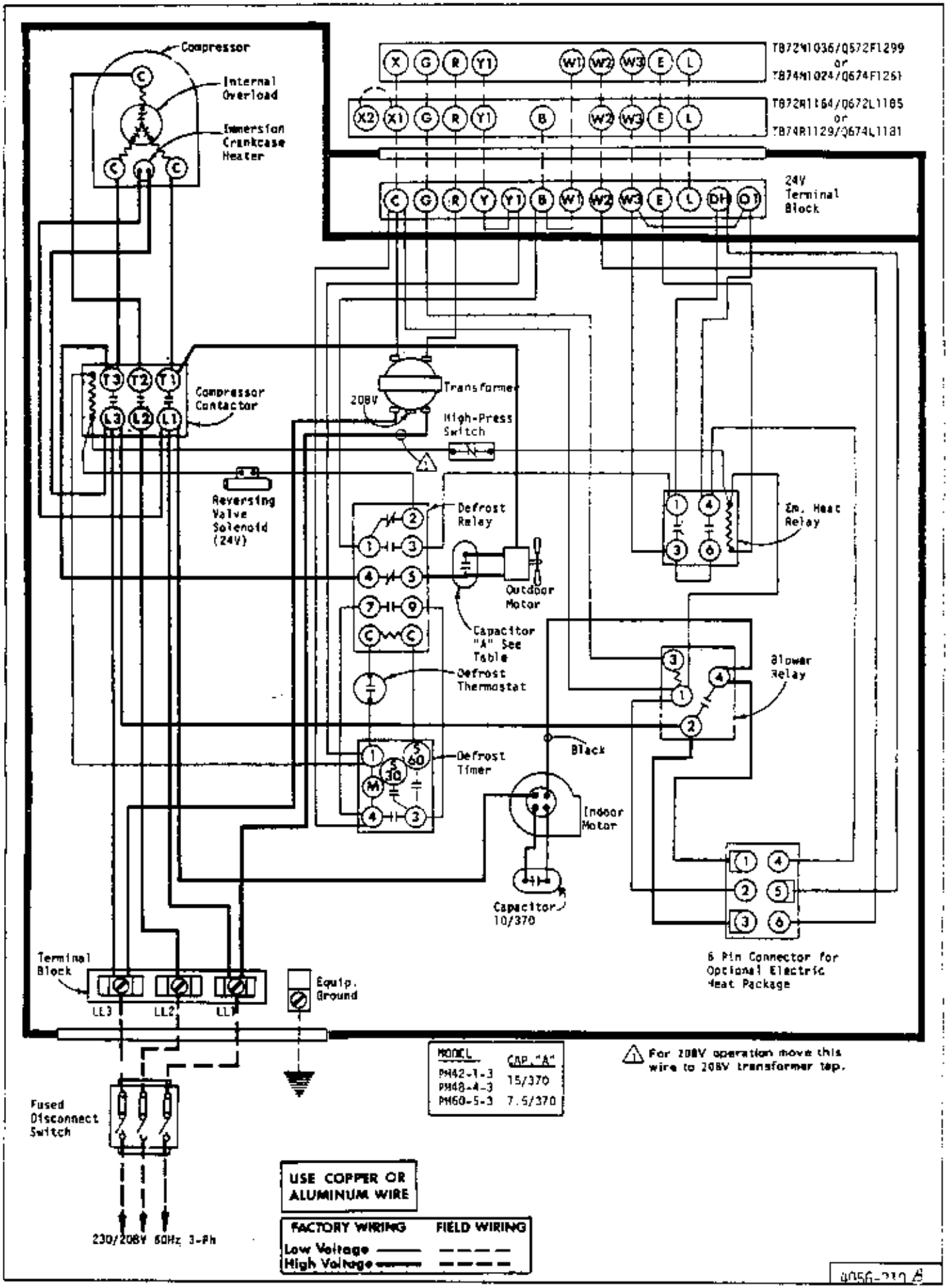

MODEL	CAP. "A"
PM42-1-3	15/370
PM48-4-3	10/370
PM60-5-3	7.5/370

4056-310 B

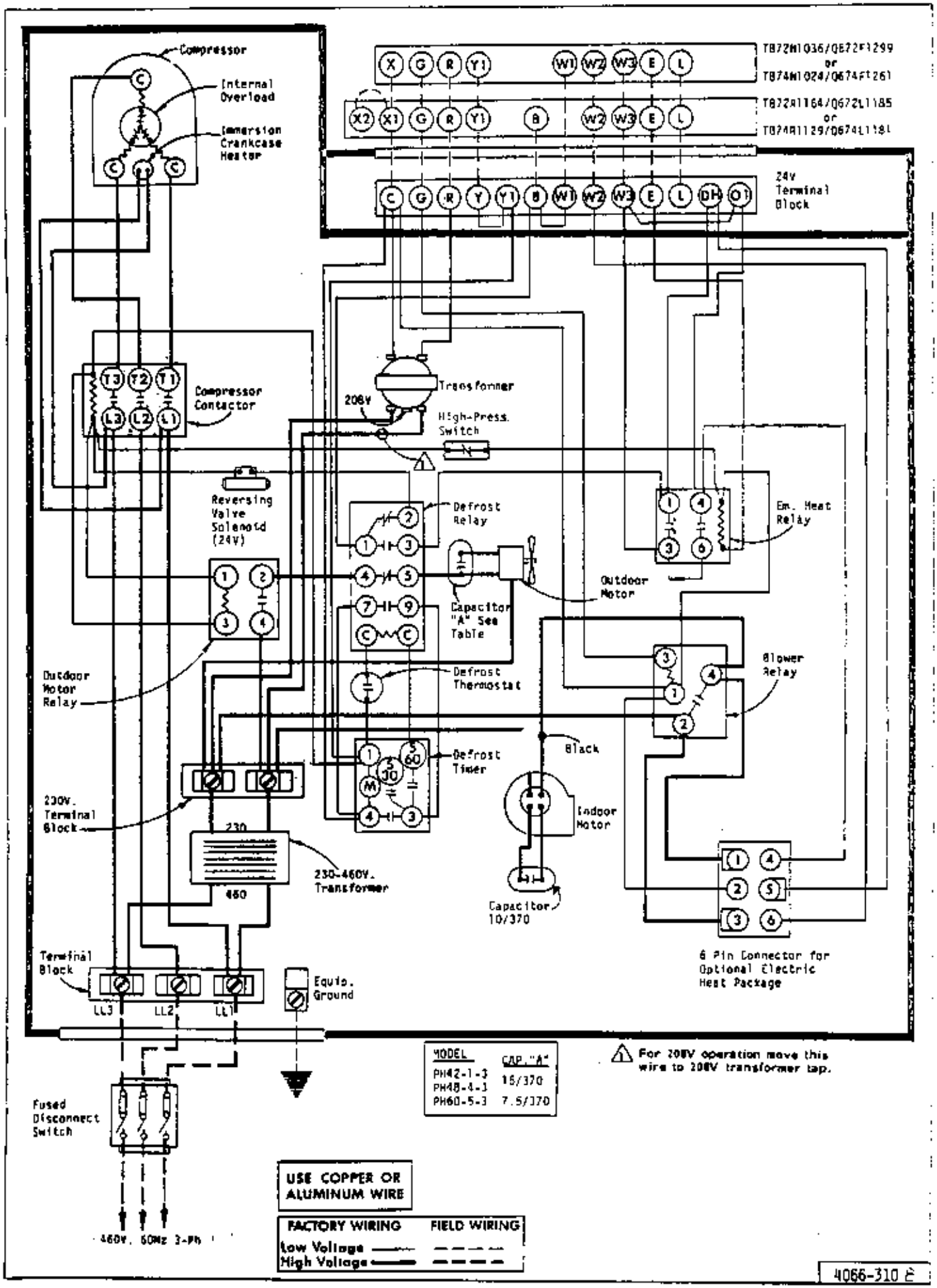
Compressor
Internal Overload
Immersion Crankcase Heater
T872N1036/Q672F1299 or T874N1024/Q674F1261
T872R1164/Q672L1185 or T874R1129/Q674L1181
24V Terminal Block
Compressor Contactor
Transformer
208V
High-Press. Switch
Reversing Valve Solenoid (24V)
Defrost Relay
Em. Heat Relay
Outdoor Motor
Capacitor "A" See Table
Outdoor Motor Relay
Defrost Thermostat
Blower Relay
Black
Defrost Timer
230V. Terminal Block
230
460
230-460V. Transformer
Indoor Motor
Capacitor 10/370
6 Pin Connector for Optional Electric Heat Package
Terminal Block
LL3
LL2
LL1
Equip. Ground
Fused Disconnect Switch
460V. 60Hz 3-Ph
MODEL
CAP. "A"
PH42-1-3 15/370
PH48-4-3 15/370
PH60-5-3 7.5/370
For 208V operation move this wire to 208V transformer tap.
USE COPPER OR ALUMINUM WIRE
FACTORY WIRING
FIELD WIRING
Low Voltage
High Voltage
4066-310 E