INSTALLATION INSTRUCTIONS

HIGH EFFICIENCY PACKAGED AIR CONDITIONER

MODELS
P1224A1
P1230A1
P1236A1

Bard Manufacturing Company
Bryan, Ohio 43506

Since 1914...Moving ahead, just as planned.

Manual : 2100-341A
File: Volume II Tab 10
Date: 08-28-98

Contents

Figures

Tables

Getting Other Information and Publications

These publications can help you install the air conditioner or heat pump. You can usually find these at your local library or purchase them directly from the publisher. Be sure to consult current edition of each standard.

National Electrical Code ..... ANSI/NFPA 70

Standard for the Installation ..... ANSI/NFPA 90A
of Air Conditioning and
Ventilating Systems

Standard for Warm Air ..... ANSI/NFPA 90B
Heating and Air
Conditioning Systems

Load Calculation for ..... ACCA Manual J
Residential Winter and
Summer Air Conditioning

Duct Design for Residential ..... ACCA Manual D
Winter and Summer Air Conditioning
and Equipment Selection

For more information, contact these publishers:

ACCA — **Air Conditioning Contractors of America**
1712 New Hampshire Ave. N.W.
Washington, DC 20009
Telephone: (202) 483-9370
Fax: (202) 234-4721

ANSI — **American National Standards Institute**
11 West Street, 13th Floor
New York, NY 10036
Telephone: (212) 642-4900
Fax: (212) 302-1286

ASHRAE — **American Society of Heating Refrigerating, and Air Conditioning Engineers, Incorporated**
1791 Tullie Circle, N.E.
Atlanta, GA 30329-2305
Telephone: (404) 636-8400
Fax: (404) 321-5478

NFPA — **National Fire Protection Association**
Batterymarch Park
P.O. Box 9101
Quincy, MA 02269-9901
Telephone: (800) 344-3555
Fax: (617) 984-7057

TABLE 1
ELECTRICAL DATA

Model	Rated Volts & Phases	HZ	Operating Voltage Range	Maximum Unit Amps	① Maximum External Fuses or Ckt. Brk. Ckt. A	Minimum Circuit Ampacity Ckt. A	② Field Power Wiring Ckt. A	② Ground Wire Size Ckt. A
P1224A1	230/208-1	60	197 - 253	13.0	25	17	10	10
P1230A1	230/208-1	60	197 - 253	16.9	30	21	10	10
P1236A1	230/208-1	60	197 - 253	20.9	40	25	8	10
P1236A1-B	230/208-3	60	187 - 253	14.8	25	18	10	10

① Maximum time delay fuse or HACR type circuit breaker.

② 75 degree C cooper wire size, basic unit only.

TABLE 2
OPTIONAL FIELD INSTALLED HEATER PACKAGES
ONLY TO BE USED WITH THE AIR CONDITIONING MODEL INDICATED

Heater Package Model No.	Volts and Phase	P1224A1	P1230A1	P1236A1	P1236A1-B
EH3PB-A10	240/1		X	X	
EH3PC-A05	240/1	X	X	X	
EH3PC-A10		X			
EH3PC-A15			X	X	
EH3PB-B09	240/3				X
EH3PB-B15					X

TABLE 3
OPTIONAL FIELD-INSTALLED ELECTRIC HEATER TABLE

Heater Pkg. Model No.	Unit Volts Phase	Htr. KW & Capacity @ 240V		Htr. KW & Capacity @ 208 Volts		Htr. Amps @ 240V	Heater Internal Fuses	Circuit B				
		KW	BTUH	KW	BTUH			No. Field Ckts.	Minimum Circuit Ampacity	① Maximum Overcurrent Protection	② Field Power Wiring	③ Ground Wire Size
EH3PB-A10	240/208-1	10	34,100	7.50	26,000	41.7		1	53	60	6	10
EH3PC-A05	240/208-1	5	17,100	3.75	12,800	20.8		1	26	30	10	10
EH3PC-A10	240/208-1	10	34,100	7.50	26,000	41.7		1	53	60	6	10
EH3PC-A15	240/208-1	15	51,200	11.25	38,400	62.5	30/60	1	79	80	4	8
EH3PB-B09	240/208-3	9	30,700	6.75	23,000	21.7		1	28	30	10	10
EH3PB-B15	240/208-3	15	51,200	11.25	38,400	36.2		1	46	50	8	10

① Time delay fuses or "HACR Type" circuit breakers must be used for 60 and smaller sizes. Standard fuses or circuit breakers are suitable for sizes 70 and larger.

② Based on wire suitable for 75° C. Other wiring materials must be rated for marked "Minimum Circuit Ampacity" or greater.

③ Based upon Table 250-95 of N.E.C. 1993. See electrical data for basic heat pump for Circuit A wiring specification requirements.

IMPORTANT: While this electrical data is presented as a guide, it is important to electrically connect properly size fuses and conductor wires in accordance with the National Electrical Code and all existing local codes.

IMPORTANT

The equipment covered in this manual is to be installed by trained, experienced service and installation technicians. All duct work, supply and return ducts, must be properly sized for the design air flow requirement of the equipment. ACCA is an excellent guide to proper sizing. All duct work or portions thereof not in the conditioned space should be properly insulated in order to both conserve energy and prevent condensation or moisture damage.

SHIPPING DAMAGE

Upon receipt of equipment, the carton should be checked for external signs of shipping damage. If damage is found, the receiving party must contact the last carrier immediately, preferably in writing, requesting inspection by the carrier's agent.

GENERAL

The refrigerant system is completely assembled and charged. All internal wiring is complete.

The unit is designed for use with or without duct work. Flanges are provided for attaching the supply and return ducts.

These instructions explain the recommended method to install the air cooled self-contained unit and the electrical wiring connections to the unit.

These instructions and any instructions packaged with any separate equipment required to make up the entire air conditioning system should be carefully read before beginning the installation. Note particularly "Starting Procedure" and any tags and/or labels attached to the equipment.

While these instructions are intended as a general recommended guide, they do not supersede any national and/or local codes in any way. Authorities having jurisdiction should be consulted before the installation is made.

This unit is equipped with a variable speed ECM motor. The motor is designed to maintain rated airflow up to the maximum static allowed. **It is important that the blower motor plugs are not plugged in or unplugged while the power is on. Failure to remove power prior to unplugging or plugging in the motor could result in motor failure.**

⚠ CAUTION

Do not plug in or unplug blower motor connectors while the power is on. Failure to do so may result in motor failure.

FIELD INSTALLED HEATER PACKAGES (OPTIONAL)

These packaged air conditioners are manufactured without supplementary electric heaters. Supplementary heaters EH3P series (to fit P1224A1, P1230A1, and P1236A1) are available for simple, fast, field installation.

A separate field power circuit is required for the supplementary heaters.

IMPORTANT: Refer to Table 4 when designing duct work for maximum available static pressure with heater installed.

Refer to the electrical data shown on page 2 for proper application information on all available heater combinations and what units they can be used with. It also shows the applicable circuit ampacities, fuse size, and wire size for each heater combination.

Refer to the installation instructions packed with the heater for details on how to insert it into the basic unit.

FIGURE 1
PREFABRICATED ROOF CURB SPECIFICATIONS
HEAVY GAUGE GALVANIZED WITH WOOD NAILING STRIP, WELDED/LEAKPROOF
ONE PIECE CONSTRUCTION – READY TO INSTALL

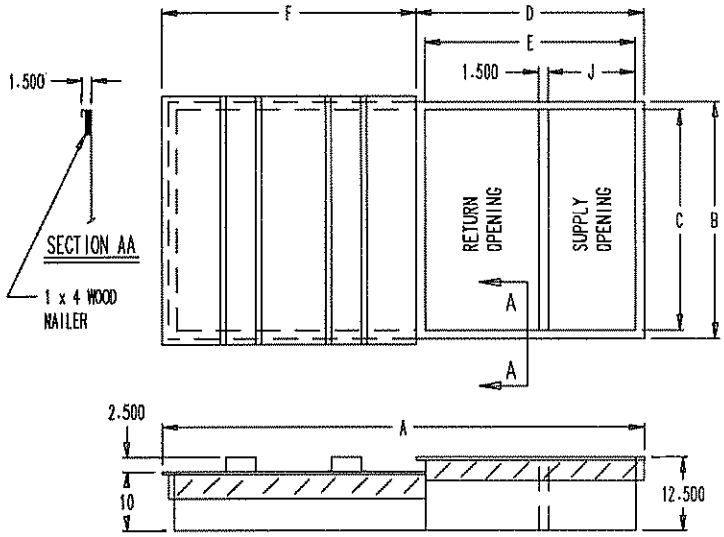

MIS-1177

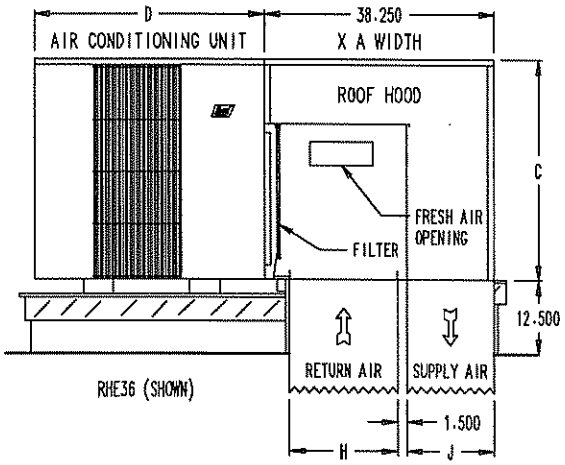

FOR SIZES SEE ROOF CURB SPECIFICATIONS
SIDE VIEW

CURB AND ROOF DETAILS

Roof Curb	A	B	C*	D	E	F	J*	H*	Roof Hood Model	Air Conditioning Units
9042-003	80-3/8	40-1/4	37-1/4	38-3/8	35-3/8	42	14-3/4	19-1/8	RHE36	P1224A1, P1230A1, P1236A1

*Duct Sizing Information
Return Air Dimension "C" is length
Return Air Dimension "H" is width

Supply Air Dimension "C" is length
Supply Sir Dimension "J" is width

FIGURE 2
FIELD FABRICATED CURBING

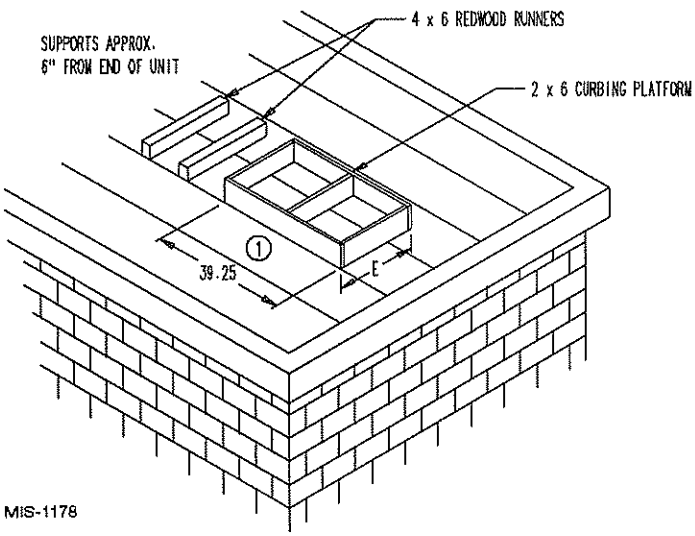

MIS-1178

Roof Hood Model	Unit Model	E
RHE36	P1224A1 P1230A1 P1236A1	41

(1) A SEPARATE METAL FLASHING SHOULD BE INSTALLED AROUND WOOD CURBING. CAULK & SEAL ALL JOINTS & WEATHERPROOF.

LOCATION

GENERAL

The unit must be located outside, or in a well ventilated area. It must not be in the space being heated or cooled. A sound absorbing material should be considered if the unit is to be installed in such a position or location that might cause transmission of sound or vibration to the living area or adjacent buildings.

SLAB MOUNTING

In areas where winter temperatures *DO NOT* go below 32° F for periods over twelve hours, the unit may be slab mounted at grade level. When installing unit at grade level, install on a concrete slab at least four inches above finished grade level. Slab should have a slope tolerance away from the building structure of at lease 1/4 inch per foot, while being level from side to side. Place slab in a location where runoff water from higher ground will not collect around unit. See Figure 3.

A minimum of 18 inches should be provided between the coil inlet and any building surfaces. Provide at least four feet between coil outlet and any building wall, fences or other vertical structures. Provide a minimum of three feet clearance on the service access side of the unit. See Figure 4

ROOF MOUNTING

When a unit is installed in areas where low ambient temperatures or strong winter winds exist, it should be placed for prevailing winter winds are not in direct line with the outdoor coil. If this is not possible, a wind barrier should be constructed. Place barrier 24 inches from the coil inlet side of the unit and in the direction of prevailing winds. Size barrier at least the same height and width as the unit. This may be necessary on ground level installations, also. See Figure 5.

WINTER INSTALLATION BELOW 32°F

In areas where winter conditions go below 32°F for extended periods, the unit must be elevated above the mounting surface to prevent snowfall or defrost ice accumulation from interfering with the operation of the unit. A minimum of twelve inch elevation is recommended, while greater elevation may be required for areas of high snow accumulation. Poured concrete, steel framework, brick, cement block, etc., can be utilized to construct a suitable raised mounting platform. See Figure 6.

DUCT WORK

Refer to Table 4 when designing duct work for maximum static pressure available with the specific model and heater package being installed.

TABLE 4
RATED CFM AND EXTERNAL STATIC PRESSURE (ESP) WET COIL (COOLING)

Model	Rated CFM	Rated ESP	Maximum ESP
P1224A1	800	.10	.50
P1230A1	1000	.15	.50
P1236A1	1100	.15	.50

TYPICAL INSTALLATIONS

1. **ROOF MOUNTED** – The unit is mounted on a sturdy base on the roof of the building. Return air to the unit is brought through a single return grille (grilles with built-in filters are best since they enable easy access for filter changing). Return air ducts are attached to the lower section of the front panel. Supply air is brought from the unit to attic duct work or to a furred down hall. Supply air duct is attached to the top of the front panel.

   CAUTION: All outdoor duct work must be thoroughly insulated and weatherproofed. All attic duct work must be thoroughly insulated. Two inch thick insulation with suitable vapor barrier is recommended for both outdoor and attic runs.

   In roof top installation, as in all installations, the unit must be level from side to side. However, the unit should have a pitch along the length to assure complete external drainage of precipitation.

2. **CRAWL SPACE** – Duct work installed in crawl space must be well insulated and provided with a vapor barrier. In addition, the crawl space must be thoroughly ventilated and provided with a good vapor barrier as a ground cover. It is most desirable to install the unit outdoors rather than inside the crawl space, so that it will be readily accessible for service.

3. **SLAB MOUNTED AT GROUND LEVEL** – This type installation is ideal for homes with a slab floor construction where a roof mounted unit is not desired. The supply and return duct work can be run through a furred closet space.

4. **THROUGH THE WALL** – This type installation requires a suitable framework to be fabricated capable of withstanding the unit weight. Normally the unit will be insulated so as to minimize supply and return duct work.

FIGURE 3
ELEVATED MOUNTING PLATFORMS

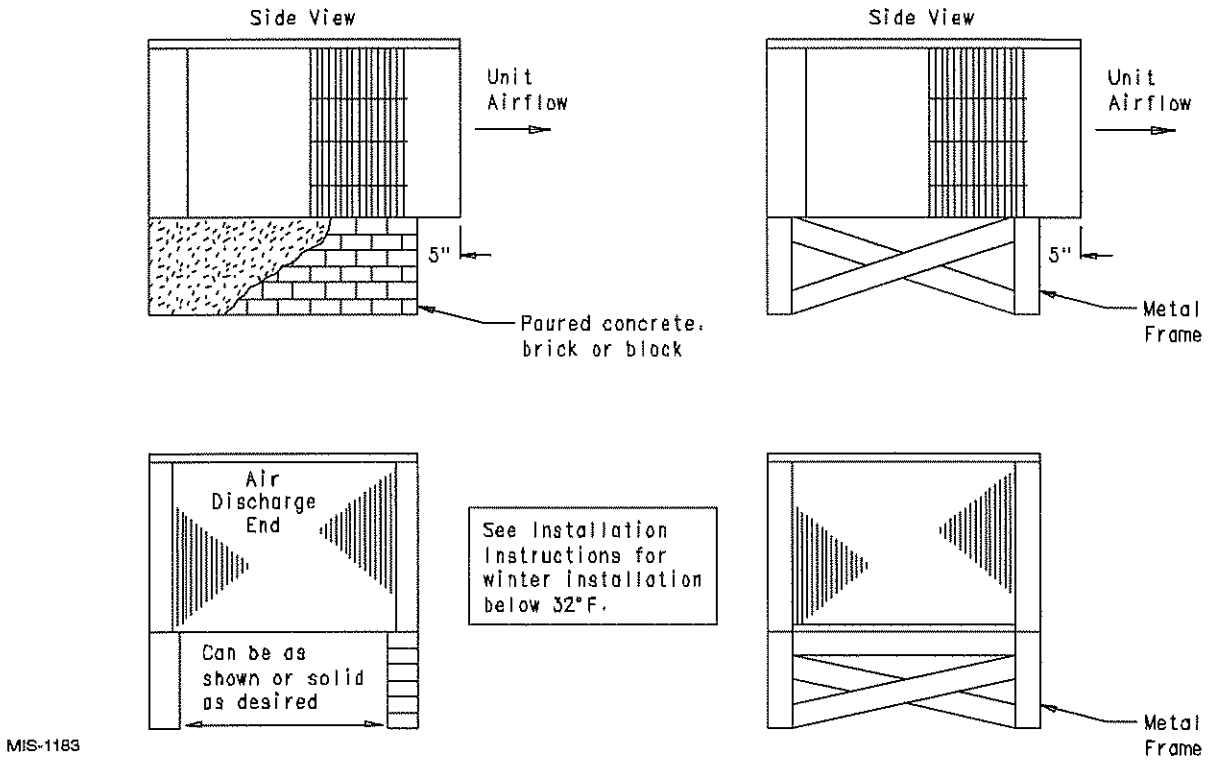

FIGURE 4
AIRFLOW and SERVICE ACCESS CLEARANCES

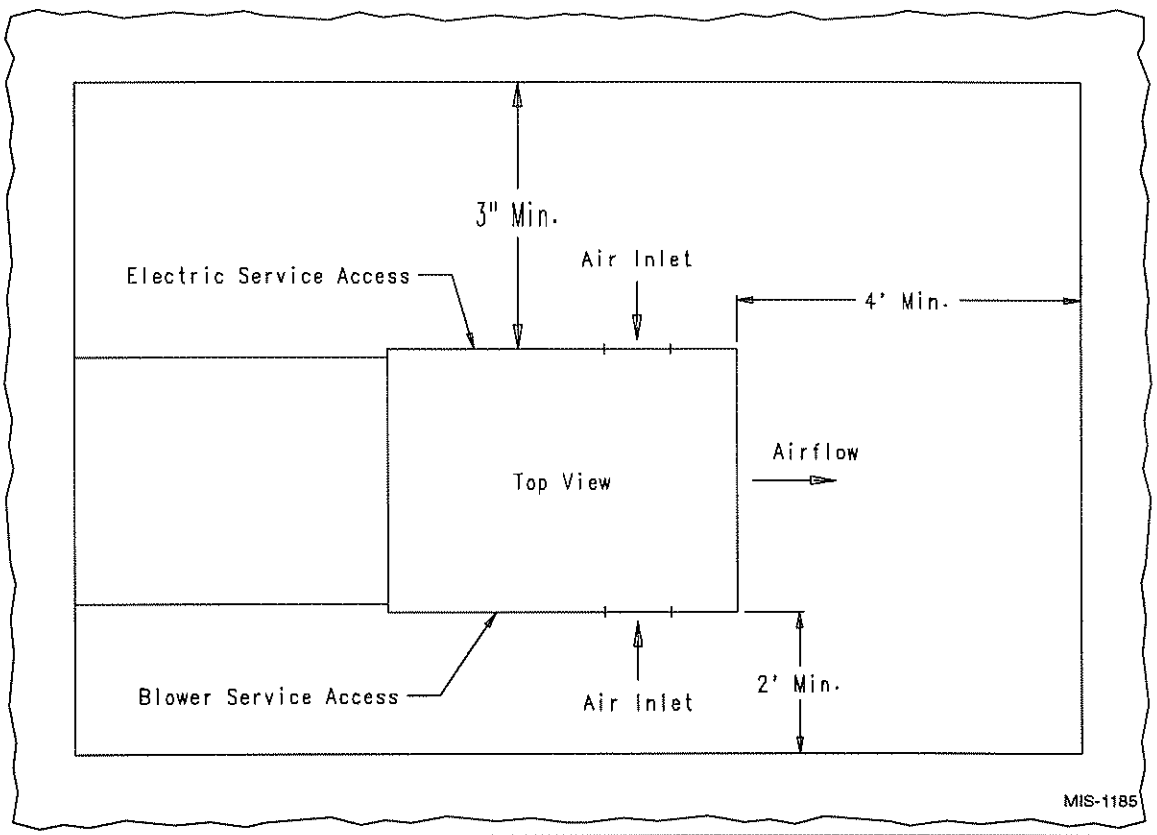

FIGURE 5
ROOF TOP APPLICATION
(May also be required for ground level installations.)

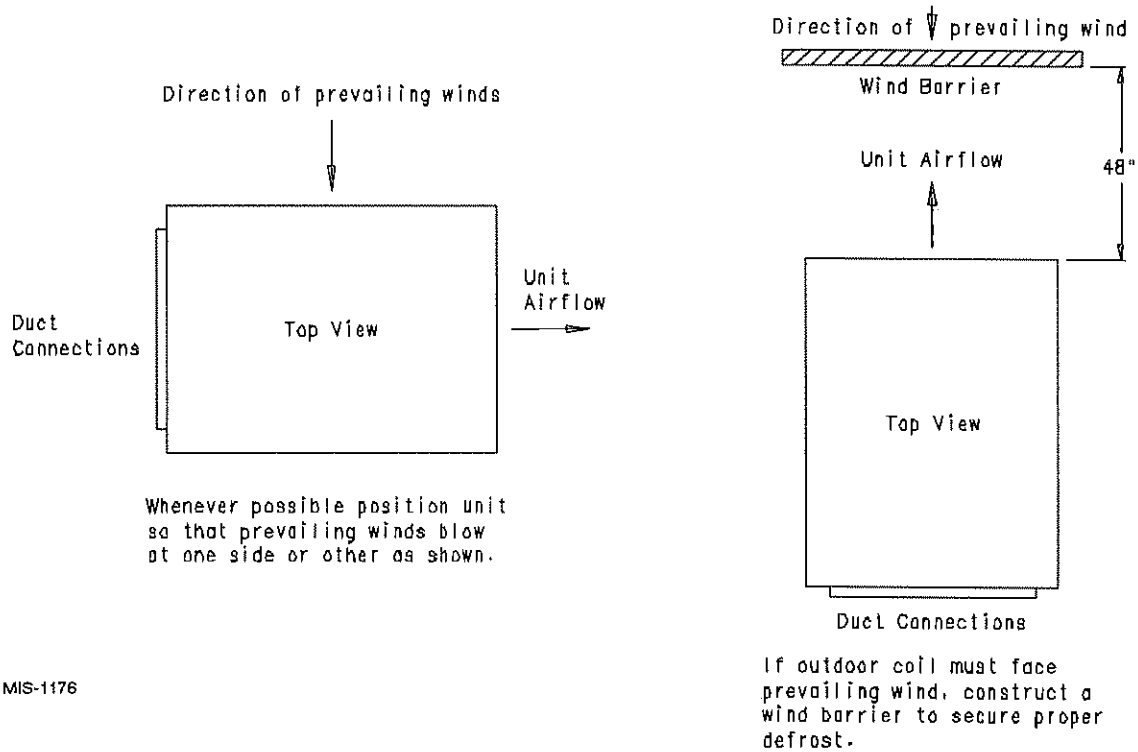

MIS-1176

FIGURE 6
SLAB MOUNTING AT GROUND LEVEL
(Above 32° F Outside Temperature)

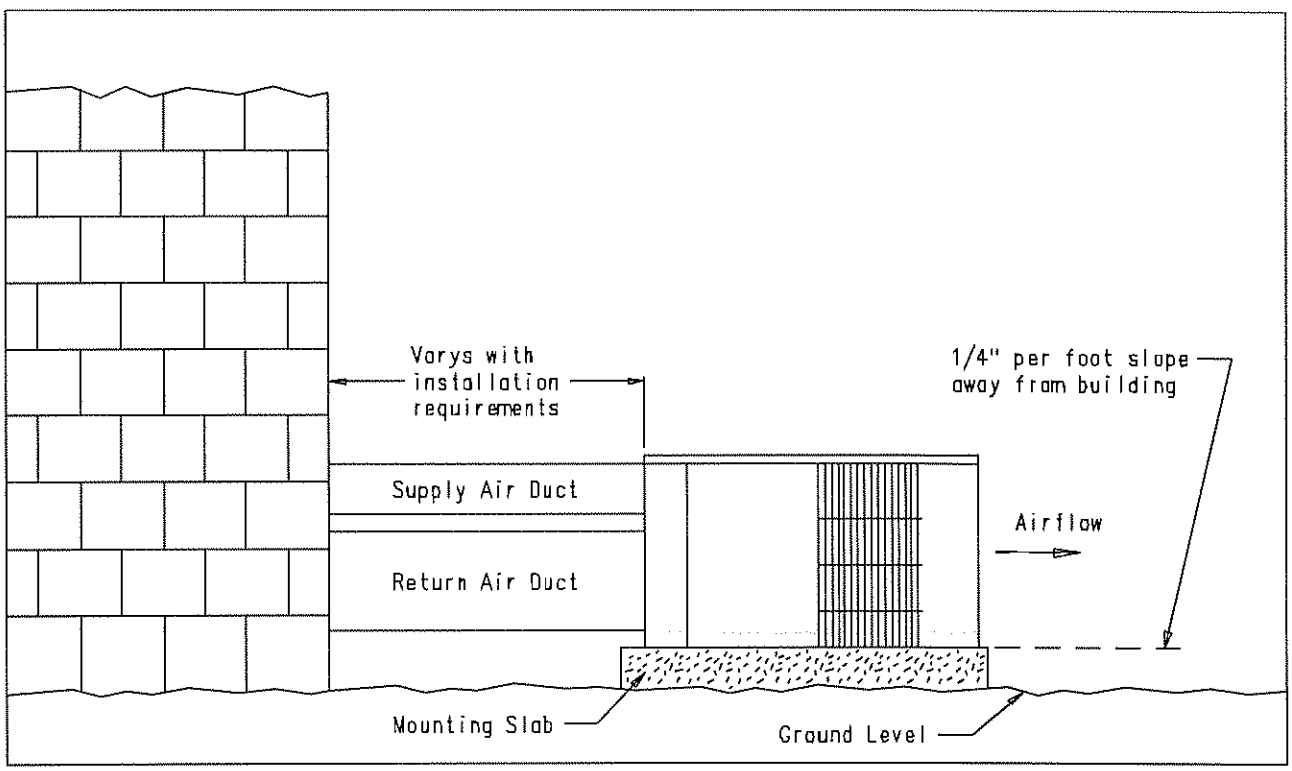

MIS-1184

5. OTHER INSTALLATIONS – Many other installations are possible with the packaged air conditioner. No matter what the installation, always consider the following facts:

   A. Insure that the discharge air is not obstructed in any way so as to cause operation difficulties.

   B. The indoor coil drain pan is equipped with a coupling that must be piped through a condensate drain trap to a suitable drain.

   C. Always mount the unit is such a position that it may be easily reached for servicing and maintenance.

   D. Insure that the unit is clear so that proper air flow over the outdoor coil will be maintained.

If this unit is operated in cooling below a 65° outdoor ambient temperature, the installation of low ambient controls (CMA-6) to unit is required.

CONDENSATE DRAIN TRAP

It is very important to provide a trap in the condensate drain line to allow a positive liquid seal in the line and assure correct drainage from the coil condensate pan.

Install condensate drain trap shown in Figure 7. Use drain connection size or larger. Do not operate unit without trap. Unit must be level or slightly inclined toward drain. With a trap installed on a unit located in an unconditioned area, water in the trap may freeze. It is recommended that the trap material be of a type that will allow for expansion of water when it freezes.

AIR FILTERS

Air filters for the return air side of the system are not provided as part of these models, and must be field supplied and installed as part of the final installation.

Prior thought should be given to return air location and placement of the air filter(s). The air filter(s) must be of adequate size and readily accessible to the operator of the equipment. Filters must be adequate in size and properly maintained for proper operation. If this is not done, excessive energy use, poor performance, and multiple service problems will result. *It is impossible to oversize air filters.* Generous sizing will result in cleaner air and coils as well as lower operating costs and extend the time between required changes. Table 5 shows minimum filter areas and recommended filter sizes. Actual filter sizes can vary with the installation due to single or multiple returns utilizing a filter/grille arrangement or being placed immediately ahead of the indoor coil face in the return air duct.

TABLE 5

Model	Minimum Filter Areas	Recommended Size
P1224A1 P1230A1 P1236A1	462 square inches (3.21 square feet)	15 x 30-5/8 x 1

NOTE: If roof hood accessory is to be used, information on air filters may be found under that heading in this manual. Air filters are supplied as part of that package.

FIGURE 7
CONDENSATE DRAIN TRAP

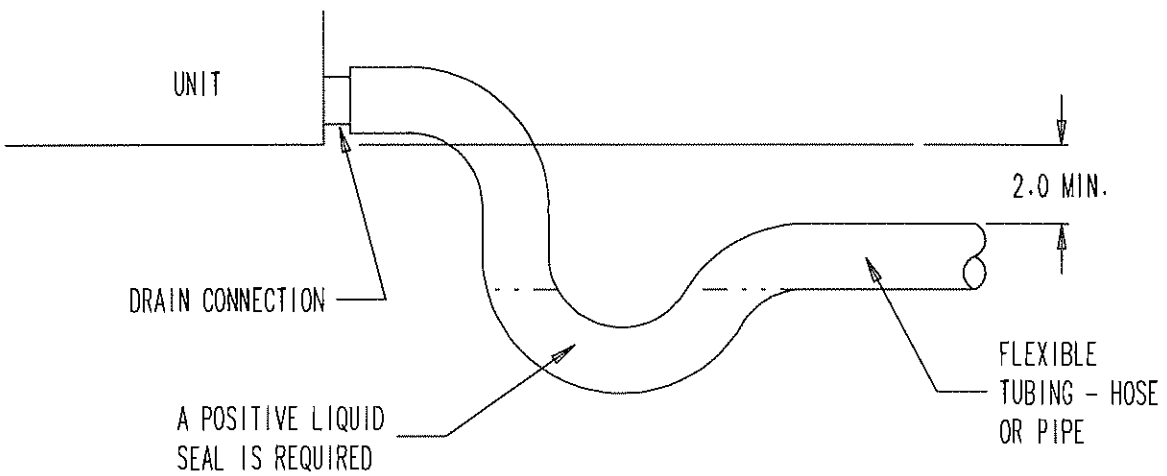

MIS-136

WIRING – MAIN POWER

Refer to the unit rating plate for wire sizing information and maximum fuse size. Each outdoor unit is marked with a "Minimum Circuit Ampacity". This means that the field wiring used must be sized to carry that amount of current. If field installed heaters are added to the basic unit, a second separate power supply circuit will be required. The heater rating plate located adjacent to the basic unit rating plate will show the appropriate circuit ampacity fuse size, etc. (Also see "Electrical Data" on pages 2 and 3.) *All models are suitable for connection with copper wire only.* These instructions ***must*** be adhered to. Refer to the National Electrical Code for complete current carrying capacity data on the various insulation grades of wiring material.

The electrical specifications on page 2 and 3 lists fuse and wire sizes (75°F copper) for all models including the most commonly used heater sizes.

The unit rating plate lists a "Maximum Time Delay Fuse" or "HACR" type circuit breaker that is to be used with the equipment. The correct size must be used for proper circuit protection and also to assure that there will be no nuisance tripping due to the momentary high starting current of the compressor.

WIRING – 24V LOW VOLTAGE CONTROL CIRCUIT

Five (5) wires should be run from thermostat subbase to the 24V terminal board in the unit. A five conductor, 18 gauge copper, color-coded thermostat cable is recommended. The connection points are shown in Figure 8.

FIGURE 8 – LOW VOLTAGE WIRING

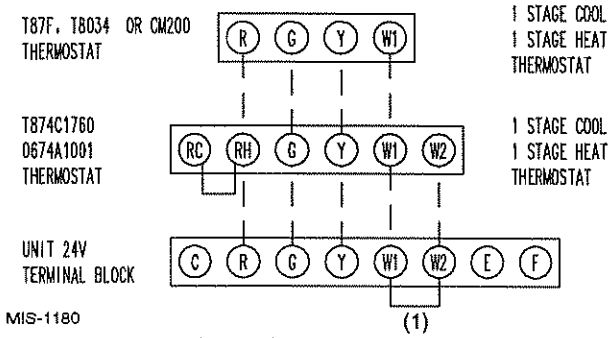

(1) Remove jumper for 2 stage electric heat on units with 15 or more KW

TABLE 6 – THERMOSTAT WIRE SIZE

Transformer VA	FLA	Wire Gauge	Maximum Distance In Feet
55	2.3	20	45
		18	60
		16	100
		14	160
		12	250

TRANSFORMER TAPS

230/208V, 1 phase and 3 phase equipment employ dual primary voltage transformers. All equipment leaves the factory wired on 240V tap. For 208V operation, reconnect from 240V to 208V tap. The acceptable operating voltage range for the 240 and 208V taps are:

TAP	RANGE
240	253 – 216
208	220 – 187

NOTE: The voltage should be measured at the field power connection point in the unit and while the unit is operating at full load (maximum amperage operating condition).

THERMOSTATS

See specific wiring information for the different models, heater KWs, and voltages on pages 14 through 18.

TABLE 7
WALL THERMOSTAT and SUBBASE COMBINATIONS

Thermostat	Subbase	Predominant Feature
8403-019 ② (T874C1760)	8404-012 (Q674A1001)	1 stage cool, 2 stage heat System: heat-auto-cool Fan: on-auto
8403-002 ① (T87F3111)	8403-003 (Q539A1220)	1 stage heat, 1 stage cool System: heat-off-cool Fan: on-auto
8403-041 (T8034C1499)	- - - - -	1 stage heat, 1 stage cool System: heat-off-cool Fan: on-auto
8403-043 (CM200)	- - - - -	1 stage heat, 1 stage cool System: heat-off-cool Fan: on-auto

① No automatic changeover position – must be manually placed in heat or cool.

② Allows thermostat to control both heating and cooling operation when set in "AUTO" position.

IMPORTANT NOTE: Only the thermostat and subbase combinations as shown above will work with this equipment. The thermostat and subbase MUST be matched, and correct operation can be assured only by proper selection and application of these parts.

START UP AND OPERATION

THREE PHASE SCROLL COMPRESSOR START UP INFORMATION

Scroll compressors, like several other types of compressors, will only compress in one rotational direction. Direction of rotation is not an issue with single phase compressors since they will always start and run in the proper direction.

However, three phase compressors will rotate in either direction depending upon phasing of the power. Since there is a 50-50 chance of connecting power in such a way as to cause rotation in the reverse direction, verification of proper rotation must be made. Verification of proper rotation direction is made by observing that suction pressure drops and discharge pressure rises when the compressor is energized. Reverse rotation also results in an elevated sound level over that with correct rotation, as well as, substantially reduced current draw compared to tabulated values.

Verification of proper rotation must be made at the time the equipment is put into service. If improper rotation is corrected at this time there will be no negative impact on the durability of the compressor. However, reverse operation for over one hour may have a negative impact on the bearing life due to oil pump out.

NOTE: If compressor is allowed to run in reverse rotation for several minutes the compressor's internal protector will trip.

All three phase ZR*3 compressors are wired identically internally. As a result, once the correct phasing is determined for a specific system or installation, connecting properly phased power leads to the same Fusite terminals should maintain proper rotation direction.

The direction of rotation of the motor may be changed by reversing any two line connections to the unit.

SEQUENCE OF OPERATION

COOLING – Circuit R-Y makes at thermostat pulling in compressor contactor starting the compressor and outdoor motor. The G (indoor motor) circuit is automatically completed on any call for cooling operation, or can be energized by manual fan switch on subbase for constant air circulation. When G circuit is de-energized indoor blower will continue to run for one minute after the circuit is de-energized or the thermostat is satisfied.

HEATING – A circuit R-W1 is completed on each heating cycle energizing electric heat if so equipped.

START UP NOTES

For improved start up performance, wash the indoor coil with dishwasher detergent

HIGH PRESSURE SWITCH AND LOCKOUT RELAY

The air conditioners are equipped with an auto reset high pressure switch and lockout relay. The lockout relay may be reset by turning the thermostat to off or satisfying the thermostat.

SERVICE HINTS

1. Caution homeowner to maintain clean air filters at all times. Also, not to needlessly close off supply and return air registers. This reduces air flow through the system which shortens equipment service life as well as increasing operating costs.
2. Check all power fuses or circuit breakers to be sure that they are the correct rating.
3. Periodic cleaning of the outdoor coil to permit full and unrestricted airflow circulation is essential.

PRESSURE SERVICE PORTS

High and low pressure service ports are installed on all units so that the system operating pressures can be observed. Pressure tables can be found in Table 9 in this manual covering all models on cooling cycle. It is imperative to match the correct pressure table to the unit by model number.

REFRIGERANT CHARGE

The correct system R-22 charge is shown on the unit rating plate. Optimum unit performance will occur with a refrigerant charge resulting in a suction line temperature (6" from compressor) as shown in Table 8.

TABLE 8

Model	Rated Airflow	95 Degree F OD Temperature	82 Degree F OD Temperature
P1224A1	800	56 - 58	63 - 65
P1230A1	1000	56 - 58	63 - 65
P1236A1	1100	57 - 59	58 - 60

The above suction line temperatures are based upon 80°F dry bulb/67°F wet bulb (50% RH) temperature and rated airflow across the evaporator during cooling cycle.

FAN BLADE SETTINGS

Shown in Figure 9 are the correct fan blade setting dimensions for proper air delivery across the outdoor coil.

Any service work requiring removal or adjustment in the fan and/or motor area will require that the dimensions below be checked and blade adjusted in or out on the motor shaft accordingly.

FIGURE 9
FAN BLADE SETTING DIMENSIONS

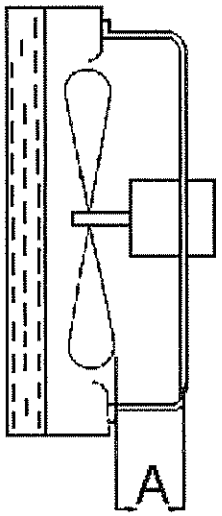

Model	Dimension A
P1224A1	1.00"
P1230A1	1.00"
P1236A1	1.00"

SUCTION AND DISCHARGE TUBE BRAZING

Compliant Scroll compressors have copper plated steel suction and discharge tubes. These tubes are far more rugged and less prone to leaks than copper tubes used on other compressors. Due to different thermal properties of steel and copper, brazing procedures may have to be changed from those commonly used.

- To disconnect: heat joint Areas 2 and 3 slowly and uniformly until braze material softens and the tube can be pulled out of suction fitting. (See Figure 10.)
- To connect:
  - Recommended brazing materials: silfos with minimum 5% silver or silver braze material with flux.
  - Reinsert tube into fitting.
  - Heat tube uniformly in Area 1 moving slowly to Area 2. When joint reaches brazing temperature, apply brazing material. (See Figure 10.)
  - Heat joint uniformly around the circumference to flow braze material completely around the joint.
  - Slowly move torch into Area 3 to draw braze material into joint. (See Figure 10.)
  - *Do not* overheat joint.

FIGURE 10
BRAZING DIAGRAM

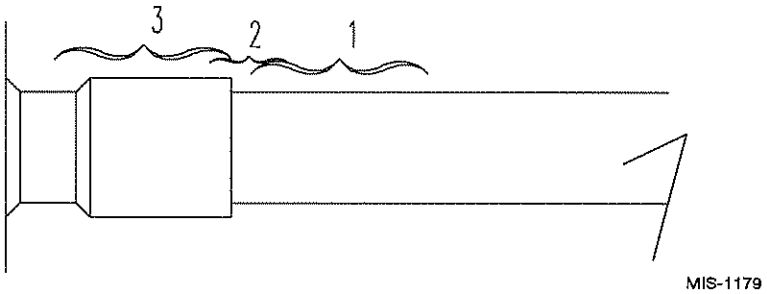

TABLE 9
PRESSURE TABLE

COOLING

Air Temperature Entering Outdoor Coil Degrees F

Model	Return Air Temperature	Pressure	75	80	85	90	95	100	105	110	115
P1224A1	75 deg. DB 62 deg. WB	Low Side	74	75	77	79	79	80	81	82	83
		High Side	188	203	217	233	249	265	282	299	317
	80 deg. DB 67 deg. WB	Low Side	79	80	82	84	85	86	87	88	89
		High Side	193	208	223	239	255	272	289	307	325
	85 deg. DB 72 deg. WB	Low Side	82	83	85	87	88	89	90	91	92
		High Side	200	215	231	247	264	282	299	318	336
P1230A1	75 deg. DB 62 deg. WB	Low Side	72	73	74	75	77	78	79	79	80
		High Side	199	213	227	243	258	275	293	310	330
	80 deg. DB 67 deg. WB	Low Side	77	78	79	80	82	83	84	85	86
		High Side	204	218	233	249	265	282	300	318	338
	85 deg. DB 72 deg. WB	Low Side	80	81	82	83	85	86	87	88	89
		High Side	211	226	241	258	274	292	311	329	350
P1236A1	75 deg. DB 62 deg. WB	Low Side	71	73	75	76	78	79	79	80	81
		High Side	209	225	242	258	275	293	310	329	346
	80 deg. DB 67 deg. WB	Low Side	76	78	80	81	83	84	85	86	87
		High Side	214	231	248	265	282	300	318	337	355
	85 deg. DB 72 deg. WB	Low Side	79	81	83	84	86	87	88	89	90
		High Side	221	239	257	274	292	311	329	349	367

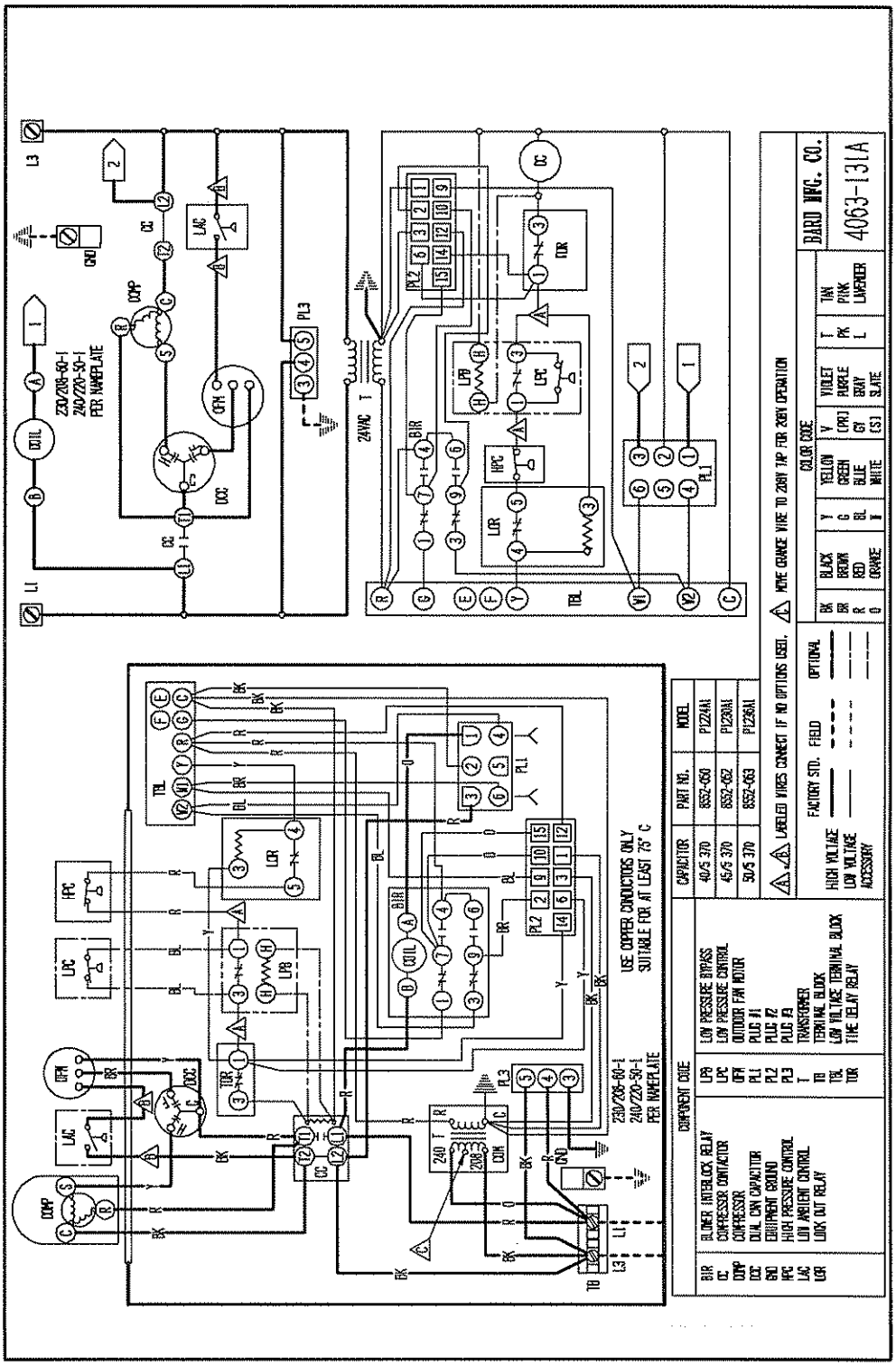
230/208-60-1
240/220-50-1
PER NAMEPLATE
COIL
COMP
OFM
LAC
LPC
HPC
LPR
TDR
TBL
PL1
PL2
PL3
24VAC T
CDC
DCC
GND
L1
L3
TB
240 T R
208 C
COM
USE COPPER CONDUCTORS ONLY
SUITABLE FOR AT LEAST 75° C
BLOWER INTERLOCK RELAY
COMPRESSOR CONTACTOR
COMPRESSOR
DUAL CAN CAPACITOR
EQUIPMENT GROUND
HIGH PRESSURE CONTROL
LOW AMBIENT CONTROL
LOCK OUT RELAY
LOW PRESSURE BYPASS
LOW PRESSURE CONTROL
OUTDOOR FAN MOTOR
PLUG #1
PLUG #2
PLUG #3
TRANSFORMER
TERMINAL BLOCK
LOW VOLTAGE TERMINAL BLOCK
TIME DELAY RELAY
CAPACITOR
PART NO.
MODEL
40/5 370
8552-050
PU24A1
45/5 370
8552-052
PU28A1
30/5 370
8552-053
PU36A1
HIGH VOLTAGE
LOW VOLTAGE
ACCESSORY
FACTORY STD.
FIELD
OPTIONAL
LABELED WIRES CONNECT IF NO OPTIONS USED.
MOVE ORANGE WIRE TO 208V TAP FOR 208V OPERATION
COLOR CODE
BLACK
BROWN
RED
ORANGE
YELLOW
GREEN
BLUE
WHITE
VIOLET
PURPLE
GRAY
SLATE
TAN
PINK
LAVENDER
BARD MFG. CO.
4063-131A

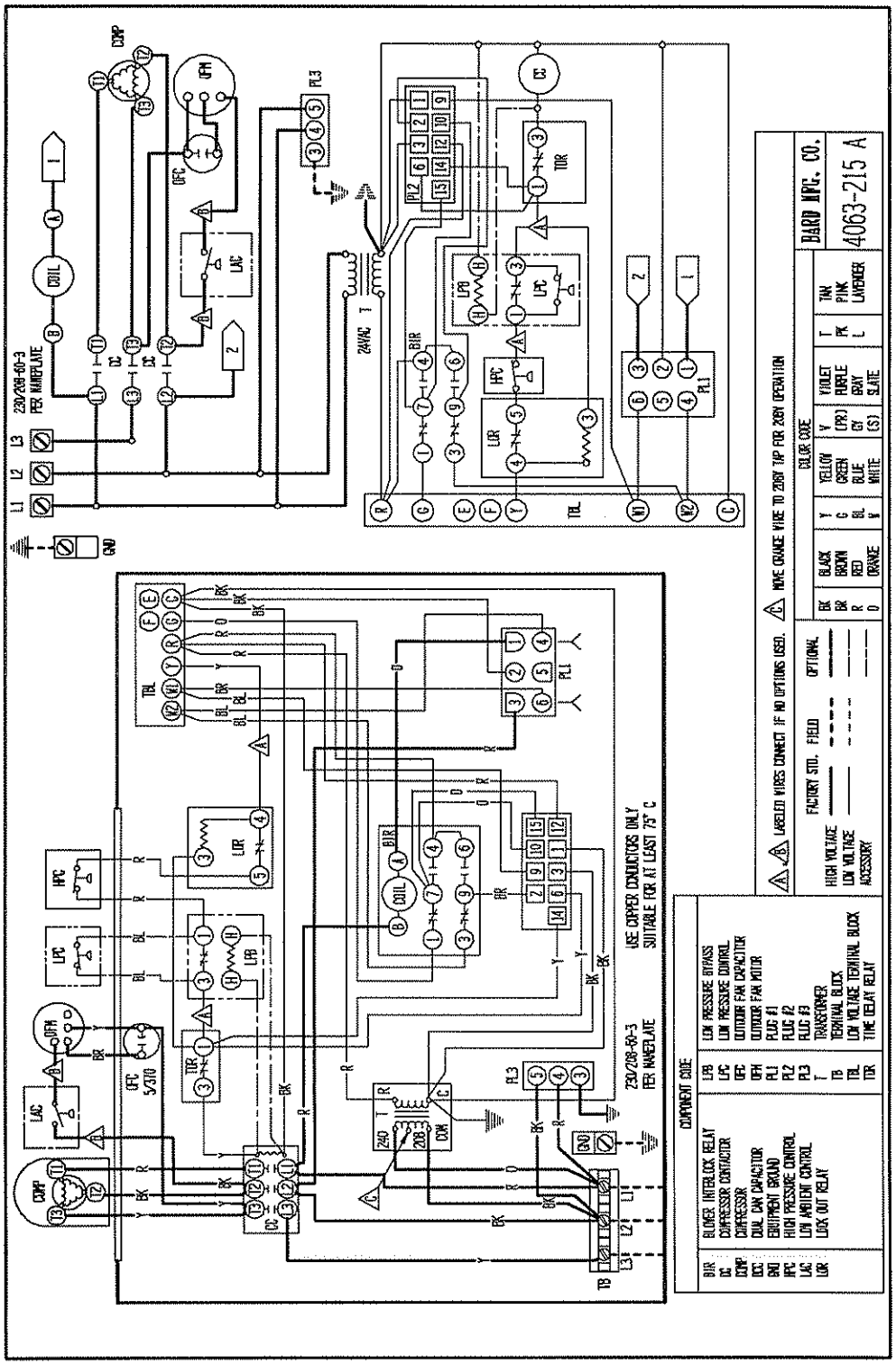
COMPONENT CODE
BIR BLOWER INTERLOCK RELAY
CC COMPRESSOR CONTACTOR
COMP COMPRESSOR
DCC DUAL CAN CAPACITOR
GND EQUIPMENT GROUND
HPC HIGH PRESSURE CONTROL
LAC LOW AMBIENT CONTROL
LOR LOCK OUT RELAY
LPB LOW PRESSURE BYPASS
LPC LOW PRESSURE CONTROL
OFC OUTDOOR FAN CAPACITOR
OFM OUTDOOR FAN MOTOR
PL1 PLUG #1
PL2 PLUG #2
PL3 PLUG #3
T TRANSFORMER
TB TERMINAL BLOCK
TBL LOW VOLTAGE TERMINAL BLOCK
TDR TIME DELAY RELAY
FACTORY STD. FIELD OPTIONAL
HIGH VOLTAGE
LOW VOLTAGE
ACCESSORY
BLACK BROWN RED ORANGE
YELLOW GREEN BLUE WHITE
VIOLET PURPLE GRAY SLATE
TAN PINK LAVENDER
BARD MFG. CO.
4063-215 A
USE COPPER CONDUCTORS ONLY
SUITABLE FOR AT LEAST 75° C
230/208-60-3
PER NAMEPLATE
24VAC
COIL
COMP
OFM
OFC
LAC
HPC
LPC
LOR
TDR
TBL
TB
PL1
PL2
PL3
GND
CC
BIR