REPLACEMENT PARTS MANUAL

WALL MOUNTED PACKAGE HEAT PUMPS

Models: SH261D
SH311D

General Notes

- Revised and/or additional pages may be issued from time to time.
- A complete and current manual consists of pages shown in the following contents section.

Important

- Contact the installing and/or local Bard distributor for all parts requirements. Make sure you have the complete model and serial number available from the unit rating plates.

Contents

Description *Page*

Cabinet Components
- Exploded View..... 1
- Usage List 2

Functional Components
- Exploded View..... 3
- Usage List 4

Control Panel
- Layout..... 5
- Usage List 6

Blower Assembly
- Exploded View..... 7
- Usage List 7

CLIMATE CONTROL SOLUTIONS

BARD MANUFACTURING COMPANY
Bryan, Ohio 43506

Since 1914...Moving ahead, just as planned.

Manual:	2110-543B
Supersedes:	2110-543A
File:	Tab 17
Date:	09-09-04
REVISED:	**1-11-23**

1-11-23: Correction made to page 5

CABINET COMPONENTS

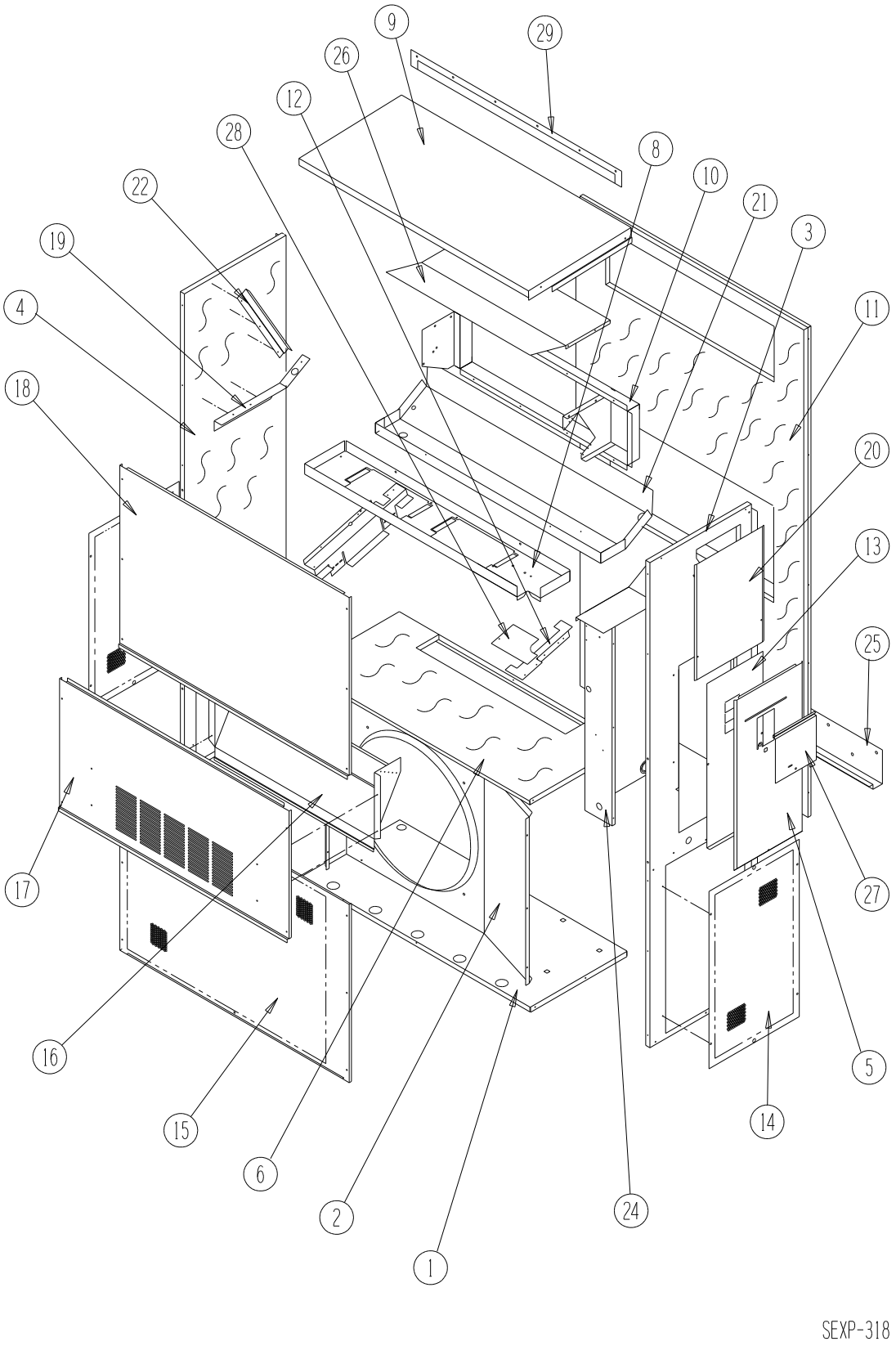

Drawing No.	Part No.	Description	SH261DA, SH261DB SH311DA, SH311DB	SH261DC SH301DC
1	S127-199	Lower Base	X	X
2	125-022	Fan Shroud	X	X
3	S500-228-* ①	Right Side	X	X
4	S500-229-* ①	Left Side	X	X
5	S533-109-* ①	Control Panel Cover (Outer)	X	X
6	521X331	Condenser Partition	X	X
8	121X182	Blower Partition	X	X
9	S506-130-* ①	Top	X	X
10	S111X030	Outlet Airframe Assembly	X	X
11	S508-088	Back	X	X
12	113X195	Filter Bracket	2	2
13	S133-104	Inner Control Panel Cover	X	
13	132-172	Inner Control Panel Cover		X
14	118-056-* ①	Side Grille	X	X
15	118-059-* ①	Condenser Grille	X	X
16	BFAD-3	Fresh Air Damper Assembly	X	X
17	S552-206-* ①	Service Door	X	X
18	S514-072-* ①	Upper Front	X	X
19	105-850	Left Side Support	X	X
20	143-034-* ①	Right Side Cover Plate (Outer)	X	X
21	S123-078	Drain Pan	X	X
22	147-044	Left Evaporator Support	X	X
24	Control Panel Assembly	See Control Panel Assembly Drawing and Parts List	X	X
25	113-140	Bottom Mounting Bracket	X	X
26	135S123	Heat Shield	X	X
27	S153-218-* ①	Disconnect Access Door	X	X
28	137-259	Fill Plate	X	X
29	113-149-* ①	Top Rain Flashing	X	X

① Exterior cabinet parts are manufactured with various paint color options. To insure that you receive the proper paint color, you must include the complete model and serial number of the unit for shich cabinet parts are being ordered.

FUNCTIONAL COMPONENTS

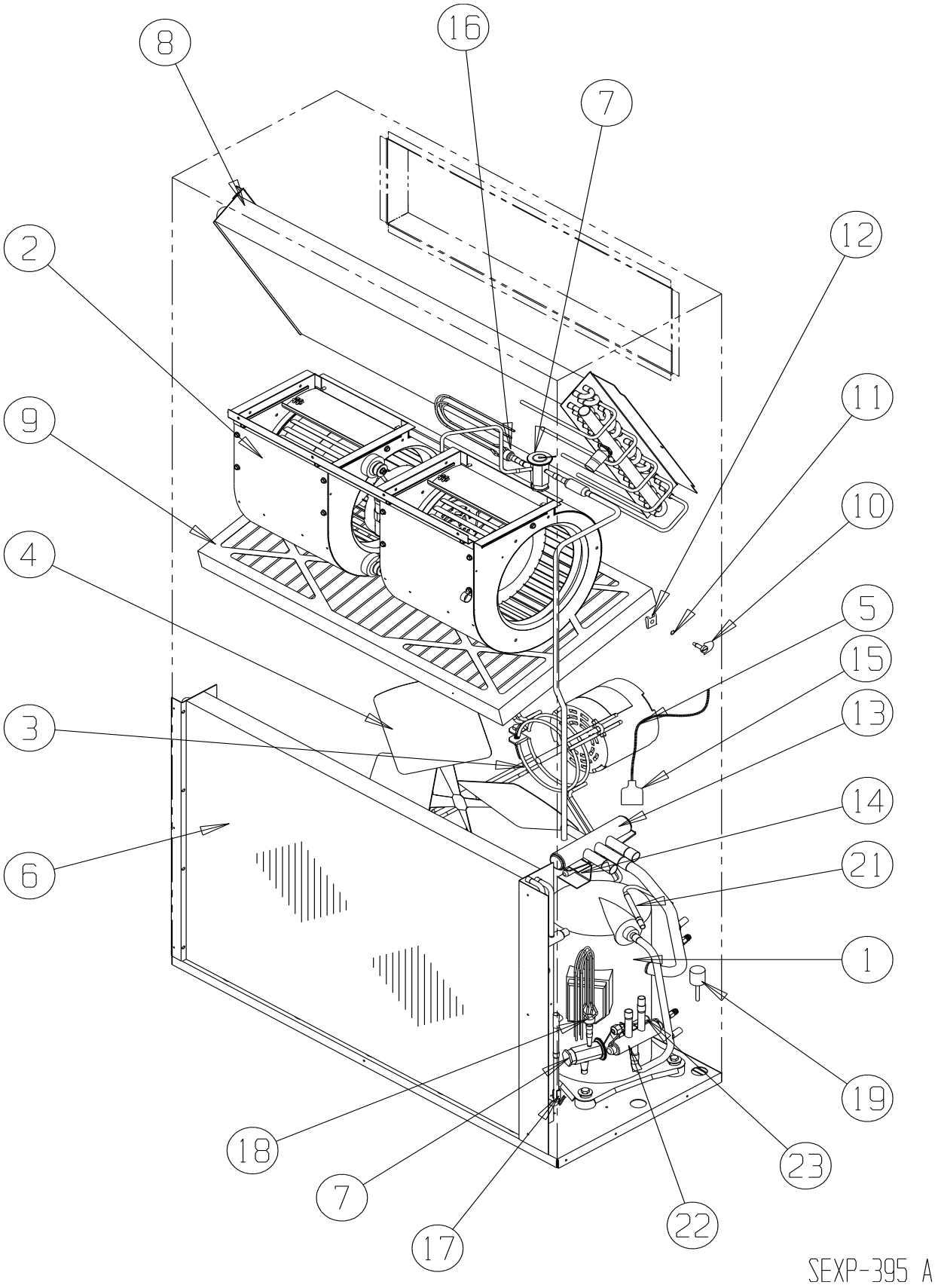

Drawing No.	Part No.	Description	SH261DA	SH261DB	SH261DC	SH311DA	SH311DB	SH311DC
1	8000-233	Compressor				X		
1	8000-258	Compressor	X					
1	8000-234	Compressor					X	
1	8000-235	Compressor						X
1	8000-231	Compressor		X				
1	8000-232	Compressor			X			
2	S900-246	Blower Assembly	X	X		X	X	
2	S900-247	Blower Assembly			X			X
3	8200-001	Fan Motor Mount	X	X	X	X	X	X
4	5151-045	Fan Blade	X	X	X	X	X	X
5	8103-013	Condenser Motor	X	X		X	X	
5	8103-020	Condenser Motor			X			X
6	5051-112	Condenser Coil	X	X	X	X	X	X
7	5651-138	Cooling & Heating TXV	2	2	2	2	2	2
8	917-0075	Evaporator Coil Assembly	X	X	X	X	X	X
9	7004-019	Air Filter 1” Throwaway	X	X	X	X	X	X
9	7003-031	Air Filter 1” Washable ①	X	X	X	X	X	X
9	7004-026	Air Filter 2” Pleated ①	X	X	X	X	X	X
10	1171-022	1/4 Turn Fastener	X	X	X	X	X	X
11	1171-024	1/4 Turn Retainer	X	X	X	X	X	X
12	1171-023	1/4 Receptacle	X	X	X	X	X	X
13	5650-039	Reversing Valve	X	X	X	X	X	X
14	5650-042	Rev. Valve Solenoid, Red Casing (Ranco)	X	X	X	X	X	X
14	5650-043	Rev. Valve Solenoid, Black Casing (Wilspec)						
15	5650-037	Molded Plug 36” Lead	2	2	2	2	2	2
16	800-0292	Cooling Distributor	X	X	X	X	X	X
17	8408-027	Defrost Sensor	X	X	X	X	X	X
18	800-0293	Heating Distributor	X	X	X	X	X	X
19	1804-0106	High Pressure Switch (Solder) ①	X	X	X	X	X	X
20	1171-044	Locking Latch	X	X	X	X	X	X
21	800-0324	Drain Back Orifice Assembly	X	X	X	X	X	X
22	5650-036	Three Way Valve	X	X	X	X	X	X
23	5650-043	Solenoid	X	X	X	X	X	X
NS	1804-0107	Low Pressure Switch (Flare) ①	X	X	X	X	X	X
NS	**CMH-7A**	Low Ambient Control (Flare) ①	X	X	X	X	X	X

NS – Not Shown
① – Optional

CONTROL PANEL

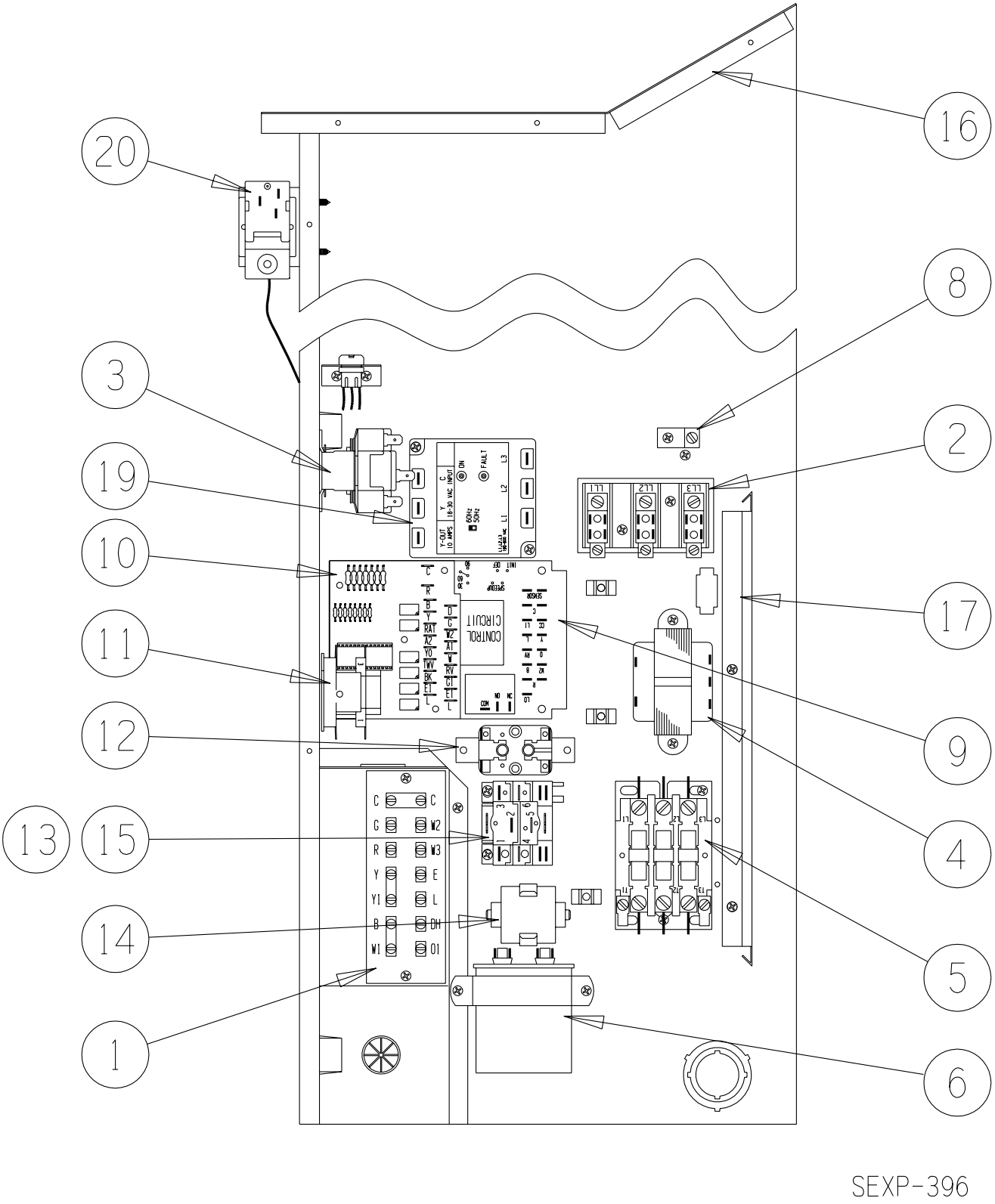

Drawing No.	Part No.	Description	SH261DA	SH261DB	SH261DC	SH311DA	SH311DB	SH311DC
1	8607-019	Low Voltage Terminal Strip	X	X	X	X	X	X
2	8607-013	Terminal Block 2 Pole	X			X		
2	8607-014	Terminal Block 3 Pole		X	X		X	X
2	8607-015	Phelon Insulator			X			X
3	8201-056	Blower Control	X	X		X	X	
3	8201-032	Blower Relay			X			X
4	8407-048	Transformer	X	X		X	X	
4	8407-050	Transformer			X			X
5	8401-007	Compressor Contactor	X			X		
5	8401-002	Compressor Contactor		X	X		X	X
6	8552-048	Compressor Capacitor	X					
6	8552-050	Compressor Capacitor				X		
6	8552-002	Outdoor Motor Capacitor		X	X		X	X
7	3000-1166	Six Pin Connector	X	X	X	X	X	X
8	8611-006	Ground Terminal	X	X	X	X	X	X
9	8201-093	Heat Pump Control Board	X	X	X	X	X	X
10	8201-092	Dehumidification Logic Board	X	X	X	X	X	X
11	8201-065	Low Pressure Bypass (TDR) ①	X	X	X	X	X	X
12	8201-008	Low Ambient Bypass Relay ①	X	X	X	X	X	X
13	8607-017	LAC Terminal Block ①	X	X	X	X	X	X
14	8551-005	Start Device ①	X			X		
15	8201-032	Outdoor Fan Relay			X			X
16	S517X137	Control Panel Top	X	X	X	X	X	X
17	135-122	Wire Shield	X	X	X	X	X	X
18	117X123	Control Panel	X	X	X	X	X	X
19	8201-085	Phase Monitor		X	X		X	X
20	8408-037	Return Air Thermostat	X	X	X	X	X	X
NS	4096-126	Wiring Diagram	X			X		
NS	4096-239	Wiring Diagram		X			X	
NS	4096-331	Wiring Diagram			X			X
NS	8615-038	Circuit Breaker 35A 2 Pole (0Z)	X			X		
NS	8615-051	Circuit Breaker 25A 3 Pole (0Z)		X			X	
NS	8615-067	Toggle Disconnect (0Z)			X			X

NS – Not Shown
① – Optional

BLOWER ASSEMBLY

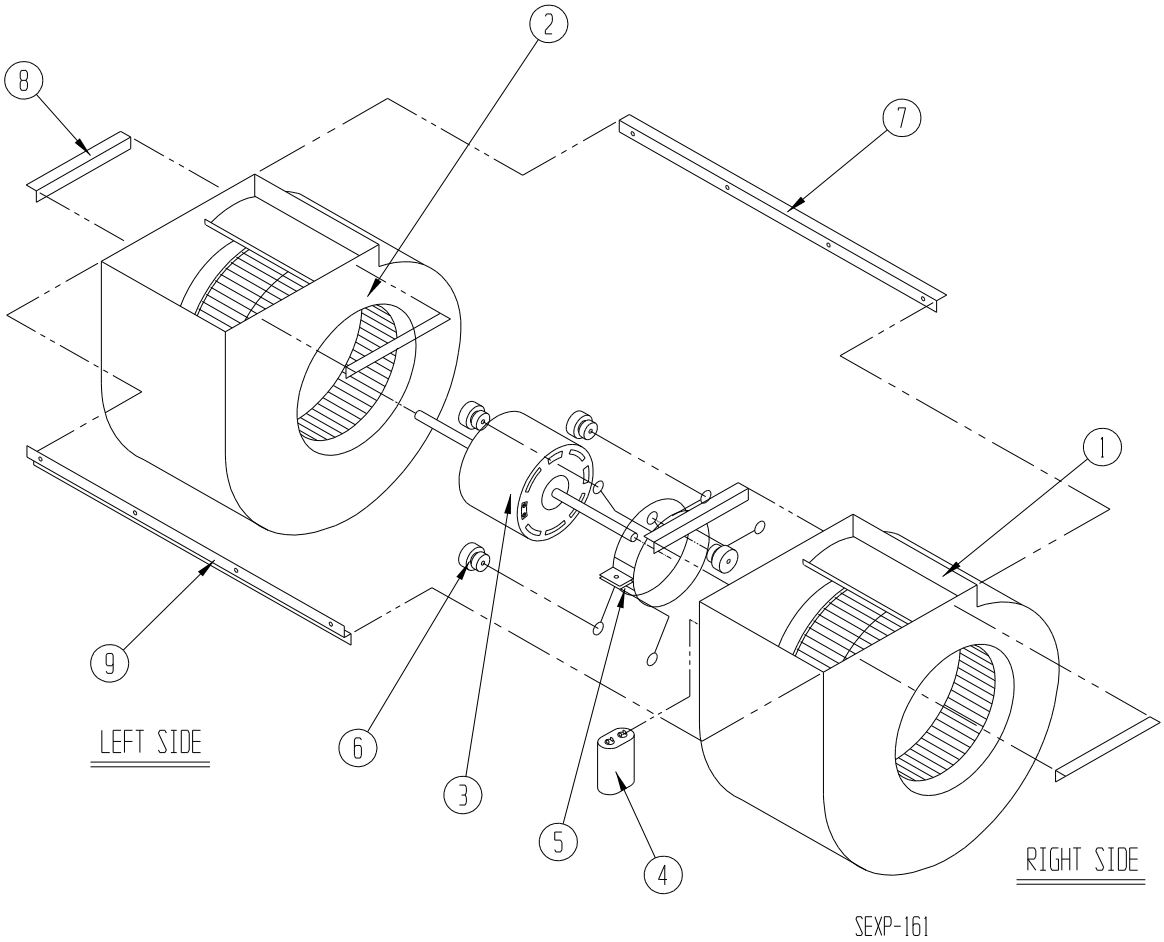

Dwg. No.	Part No.	Description	900-246	900-247
1	5152-051	Housing, Wheel and Cutoff (CW)	X	X
2	5152-052	Housing, Wheel and Cutoff	X	X
3	8103-025	Blower Motor (230/208)	X	
3	8103-026	Blower Motor (460)		X
4	8552-005	Capacitor	X	
4	8552-004	Capacitor		X
5	8200-031	Motor Mount	X	X
6	5451-011	Grommets	6	6
7	105-870	Back Brace	X	X
8	104-868	Side Angle	4	4
9	103-401	Front Brace	X	X